United States Court of Appeals

for the Second Circuit

APPENDIX

75-7362

United States Court of Appeals
FOR THE SECOND CIRCUIT

Docket No. 75-7362

B

PERMA RESEARCH & DEVELOPMENT COMPANY,

Plaintiff-Appellee,

—v.—

THE SINGER COMPANY,

Defendant-Appellant.

ON APPEAL FROM THE UNITED STATES DISTRICT COURT
FOR THE SOUTHERN DISTRICT OF NEW YORK

JOINT APPENDIX

VOLUME I (Pages A-1 through A-245)

DOCKET ENTRIES
PORTIONS OF RECORD ON APPEAL (R 1–R 185)

POLETTI FREIDIN PRASHKER
FELDMAN & GARTNER
Attorneys for Plaintiff-Appellee
777 Third Avenue
New York, New York 10017

WINTHROP, STIMSON, PUTNAM
& ROBERTS
Attorneys for Defendant-Appellant
40 Wall Street
New York, New York 10005

PAGINATION AS IN ORIGINAL COPY

INDEX TO APPENDIX

VOLUME III

VOLUME IV

All Exhibits are located in a Separate Exhibit Binder.

CERTIFIED COPY OF DOCKET ENTRIES (R A-H)

CIVIL DOCKET 66 Civ 665

NITED STATES DISTRICT COURT

JUDGE DUFFY

66 Civ 665

Jury demand date:

~~[illegible]~~

JUDGE MC LEAN

Form No. 100 Rev.

TITLE OF CASE	ATTORNEYS
	For plaintiff:
PERMA RESEARCH & DEVELOPMENT COMPANY,	~~[illegible]~~ ~~[illegible]~~
	~~60 East [illegible] St., NYC~~ [illegible]
vs	~~[illegible]~~
	Polutti, Freidin, Feldman, ~~[illegible]~~
THE SINGER COMPANY,	Prashker, Gartner ~~([illegible])~~
	777 Third Ave. NYC 10017
	(11-21-69)
	For defendant:
	Winthrop Stimson Putnam & Roberts
	40 Wall St. NYC

STATISTICAL RECORD		COSTS	DATE	NAME OR RECEIPT NO.	REC.	DISB.
5 mailed	x	Clerk	3-5-66	[illegible]	15	
			3-11-66	[illegible]		15
			[illegible]	[illegible]		
6 mailed		Marshal	[illegible]	[illegible]		5
			6/3/75	Winthrop	5-	
s of Action:		Docket fee	6/2/75	[illegible]		5-
ch. of contract aratory Judgmt.		Witness fees				
on arose at:		Deposition				

66 Civ 665 Perma Research & Development Co. vs Singer Co. 66 Civ 66[illegible]

JUDGE D[illegible] JUDGE MacMAHON

DATE	PROCEEDINGS	Date Of Judgment
[illegible]or. 9-66	Filed complaint and issued summons.	
[illegible]ar. 30-66	Filed stip. & order extending deft's time to answer to 4-20-66-Cannella,J.	
[illegible]or. 13-66	Filed summons & return, served deft. 3-11-66	
[illegible]or. 20-66	Filed ANSWER of deft, and counterclaim	WSP
[illegible]ay 10-66	Filed pltff's REPLY to counterclaim	
Jun 3-66	Filed deft's notice of examination.	
June 15-66	Filed pltff's notice to take deposition of deft. by Robert Kolby, Hal Sharp, Al Rommel and Cecil Morris.	
Sep. 8-66	Filed pltff's notice to take deposition	
Feb. 24-67	Filed deft's affdvt & notice of motion for summary Judgment ret. 3-7-67	
Feb. 24-67	Filed deft's memorandum in support of its motion	
March 6-67	Filed stip adjourning deft' motion to 3-28-67	
Mar. 20-67	Filed pltff's affdvt & notice of motion for summary judgment ret. 3-28-67	
Mar. 20-67	Filed memorandum in support of motion for summary judgment(pltff's)	
Mar. 20-67	Filed pltff's affdvt & notice of motion to strike affdvt ret. 3-28-67	
Mar. 20-67	Filed pltff's memorandum of law in support of its motion	
Mar. 20-67	Filed pltff's affdvt & notice of motion for leave to file amended reply ret. 3-28-67	
Mar. 29-67	Filed memo endorsed on motion filed 3-20-67-motion denied following argument-so ordered-Bryan, J. mailed notice	
Mar.29-68	(Filed in Court) - Memorandum in Support of Pltff's Motion to file amended reply out of time	
Mar.29-68	(filed in Court) - Defs. Reply Memorandum in support of motion for summary judgment and in opposition to pltff's Cross Motion for Summary Judgment	
Apr.1-68	Filed Opinion #34610 - Singer's motion for summary judgment on its counterclaim will be denied. Settle order on notice embodying the decisions reached in this opinion. - Bryan, J. m/n	
Apr.15-68	Filed Memorandum in Support of Singer's Motion for Reargument	
Apr.15-68	Filed Deft. Notice of Motion for reargument ret. 4-23-68	
Apr.19-68	Filed Pltffs. Notice to Take Deposition upon oral examination. Supboena issued	
Apr.22-68	Filed Pltffs. Memorandum in support of its motion for reargument as to all the issues considered by the Court on the Cross-motions for summary judgment.	
Apr.22-68	Filed Pltffs. Notice of Motion for reargument ret. 4-30-68	
Apr.22-68	Filed Pltffs. Stip. that the motion of the deft. for reargument is adj. from the 23rd day of April 1968 to the 30th of April 1968.	
Apr.23-68	Filed Pltffs. Notice to Take Depositions upon oral examination	
Apr.26-68	Filed Defs. Memorandum in Opposition to Pltff's motion for reargument as to all the issues considered by the Court on the Cross motions for summary judgment ret. 4-30-68	
May 3-68	Filed Deft. Stipulation adj. date of taking deposition to a date - 30 days after a decision by Bryan, J. on the motions for reargument of Judge Bryan's decision dated April 1, 1968 of the parties' cross-motions for summary judgment.	
May 14-68	Filed Consent Order that the firm of Maltese, Titone and Anastasi be substituted in place of Watson,Hass,Goodkind as attys. for Perma Research & Develop.Co.	
July 12-68	Filed memo-endorsed on motion of 4-22-68: Both plaintiff's and defendant's motions for reargument are granted. On reargument my original decision dated, March 22,1968 is adhered to. It is so ordered. Bryan,J. m/n	
Aug 12-68	Filed Notice of Settlement ret. 7-29-68 10 A.M. and Order and entry of Judgment Ordered that the Court expressly determining under Rule 54 b of the FRCP that there is no just reason for delay,hereby expressly directs that a final judgment be entered: 1-dismissing with prejudice the First Count of the complaint and 2- dismissing with prejudice the second count of the complaint insofar as said count seeks rescission of the December 21,1964 agreement between Perma and Singer, and said Judgment is hereby entered. Judgment entered 8-13-68 [illegible] Bryan, J.	
Aug.16-68	Filed notice of entry of order & Judgment.	

Cont'd on page #3

DATE	PROCEEDINGS	Date Judgm
Aug.27-68	Filed notice of appeal by pltff. Mailed copy to Winthrop,Stimson,Putnam & Roberts 40 Wall Street,N.Y.	
Sept.17-68	Filed Undertaking costs on appeal in the sum of $250- U.S. Fidelity & Guaranty Co.	
Sept.24-68	Filed deposition of deft. Singer Co. by Hermann H. Sharp taken on 7-19-66. m/n	
Sept.24-68	Filed deposition of deft. Singer Co. by Robert A. Kloby taken on 7-12-66.	
Sept.24-68	Filed deposition of deft.Singer Co. by Robert E. Pomel taken on 7-11-66.	
Sept.24-68	Filed deposition of deft.Singer Co. by Robert A. Kloby taken on 7-13-66.(Continued)	
Sept.24-68	Filed depostion of Deft.Singer Co. by Robert A. Kloby taken on 7-14-66. (Continued)	
Sept.24-68	Filed depostion of deft.Singer Co. by Albert E. Pomel taken on 7-18-66. (Continued)	
Sept.24-68	Filed deposition of deft.Singer Co. by Albert E. Pomel taken on 7-12-66.(continued)	
Sept.24-68	Filed deposition of deft.Singer Co. by Robert R. Patter taken on 10-4-66.	
Sept.24-68	Filed deposition of deft.Singer Co. by Cecil Morris taken on 11-29-66.	
Sept.24-68	Filed deposition of deft.Singer Co. by Burton C. Person taken on 11-30-66.	
Oct.2-68	Filed notice record on appeal has been certified and transmitted to the U.S.C.A.	
Jun.26-69	Filed true copy from the U.S.C. of appeals - Ordered that the orders of district Court be & hereby are affirmed with costs to be taxed against the appellant. Clerk. Judg. Ent. Clerk. Mailed notice ent. 6-30-69	
Jul.3-69	U.S.C.A. costs in favor of appellee in the sum of $667.00 & docketed as Judgment #70,122. Judg. Ent.Clerk. Ent. 7-8-69	m/n
Sep.5-69	Filed deft's notice of motion for summary judgment ret. 9-16-69.	
Sep.5-69	Filed deft's statement rule 9(g).	
Sep.5-69	Filed deft's memorandum in support of his motion for summary judgment.	
Sep.19-69	Filed pltff's affidavit & show cause order to substitute attorneys ret.9-23-69.Pm.506.	
Sep.19-69	Filed pltff's memorandum of law in support of his motion .(Show cause order.)	
Sep.18-69	Filed notice pursuant to rule 4(C) Louis Cantolupo,Daniel Bostick & Theo Larmond, are appointed to serve all process in above action. Clerk.	
Sep.26-69	Filed pltff's application for enlargement of time beyond 9-30-69 to answer motion to dismiss complaint.	
Sep.26-69	Filed memo-Endorsed on pltff's application filed this date: Pltff's application is granted to the following extent: Time of pltff. Perma to serve answering papers will be extended to 10-21-69. The deft's motion to dismiss will be adjourned to 10-28-69. So ordered. Bryan,J. m/n	
Sep.29-69	Filed affidavit of Worth Rowley Re: counsel fees by Perma.	
Oct.27-69	Filed stip to adj. deft's motion ret. 10-28-69 to 12-2-69.	
Dec 2-69	Filed stip to adj. deft's motion for summary judgment ret. 12-2-69 to 12-16-69	
Jan 5-70	Filed pltff's statement pursuant to Rule 9(g) of the General Rules of this Court.	
Jan 5-70	Filed affidavit of Frank Perrino, President of pltff in opposition to defts' motion for summary judgment.	
Jan 5-70	Filed memorandum in opposition of deft's motion for summary judgment.	
Jan 6-70	Filed Reply memorandum in support of summary judgment by deft. (filed in court)	
Jan 6-70	Filed pltff's memorandum in response to deft's reply memorandum. (filed in court)	
Jan 27-70	Filed deft's reply to pltff's memorandum in response to deft's post-oral argument memorandum.	
Jan 27-70	Filed pltff's memorandum in response to deft's post-oral argument memorandum.	
Jan 27-70	Filed memorandum by defts' in reply to pltff's response to deft's original reply memorandum.	
Jan 27-70	Filed affdvt of James J Leonard, atty for deft re: svc by mail.	
Jan 27-70	Filed OPINION #36525 ---MacMahon, J. -"********** Accordingly, tha motion for summary judgment is denied ----- So Ordered" MacMahon, J. m/n	
Apr 23-70	Filed Deft's notice of motion for summary judgment ---Ret: 4-28-70.	
Apr 23-70	Filed Deft's statement required by Local court rule 9(g).	
Apr 23-70	Filed Deft's memorandum in support of motion for summary judgment	
Apr.27-70	Filed stip to adj. deft's motion from 4-28-70 to 5-5-70.	

continued next page

JUDGE D[illegible]

DATE	PROCEEDINGS	Date Ord. Judgment
ay 4-70	Filed Pltff's Statement pursuant to Rule 9(g) of the Rules of this Court.	
ay 4-70	Filed Pltff's memorandum in opposition to deft's 3rd motion for summary judgment	
ay 4-70	Filed Exhibits referred to in pltff's memorandum in opposition to deft's 3rd motion for summary judgment.	
May 15-70	Filed deft's reply memorandum in support of motion for summary judgment dismissing the complaint on ground that the contracts sued on were based on a material misrepresentation.	
May 14-70	Filed Pltff's memorandum in response to deft's reply memorandum in support of its 3rd motion for summary judgment.	
May 15-70	Filed OPINION #36794 by Metzner, J. - "Deft moves for summary judgment dismissing the complaint - Motion is denied. So Ordered: Metzner, J." m/n	
May 15-70	Filed OPINION #36794, Metzner, J. Motion to dismiss is denied. So ordered. (mailed notice).	
June 19-70	Filed Pltff's notice to take the deposition of deft The Singer Co. by B. Person, Mr. Gomes, A. Bonal, Mr. Murphy, R. Kloby, Mr. McKernan, Mr. Elman, Mr. Boriss, Mr. Brocher, A. Di Scipio, N. Sharp, C. Morris, Mr. Fresko and Mr. Bruder.	
July 6-70	Filed Deft's affdvt & notice of motion for a protective order --- ret: 7-9-70.	
July 6-70	Filed Deft's memorandum in support of a protective order.	
July 17-70	Filed Affdvt of Paul R. Grant, in opposition to motion by deft for a protective order.	
July 17-70	Filed Memorandum in opposition to deft's motion for a protective order, by Paul R. Grant.	
July 23-70	Entered affdvt of Wm. C Chanler, atty for deft, in compliance with Local Rule 9(f). (filed in court on 7-23-70)	
July 23-70	Entered Deft's reply memorandum in support of motion for a protective order. (filed in court on 7-23-70)	
July 23-70	Filed Memo Endorsed on motion papers filed 7-6-70, "Motion disposed of in accordance with the Court's ruling during argument. Settle Order ---- Bonsal, J."	
July 30-70	Filed ORDER that pltff shall examine persons only still employed by daft viz. Messrs. Boriss, Brocher, Bruder, DiScipio, Fresko, Gomes and Murphy. The granting of deft's motion to strike however, shall be without prejudice to a renewed application to depose such persons upon showing of good cause after the completion of the examination of the persons described in para. 1. Examinations shall be completed NLT 11-30-70 and except as otherwise above granted, daft's motion to strike is hereby denied. Bonsal, J. m/n	
Jul 30-70	Filed Order. Plaintiff shall examine only those persons still employed by defendant,etc. viz. Boriss, Broeker,Bruder,DiScipio,Fecko,Gomes and Murphy,etc. etc. (ORDER UNSIGNED)	
OCT 27-70	Entered Memorandum-Opinion #36338 by Bryan, J. (FILED NOV. 21-1969) Pltff moves for order substituting Messrs. Poletti, Freidin, Prashker, Feldman, & Gartner as its attys in this action in place of Worth, Rowley, of Washington, D,C. trial counsel and Messrs. Maltese, Titone & Anastasi, attys of record, & fixing attys fees for Mr. Rowley and his associates. -- The following is a Solution which I find to be fair - 1) The Poletti firm will be substituted for the Rowley firm and its NY attys of record - 2) Perma shall promptly pay to the Rowley firm an additional sum of $5000. for legal services rendered. 3) Upon payment to Rowley firm, that firm shall turn over to substituted counsel all records, etc. so that the substituted attys may proceed with this litigation. 4) In addition to the payment of $5000. by Perma, Rowley shall have a lien on any proceeds of or recovery in the action in the amt. of $25,000 which lien shall be in full discharge and satisfaction of any and all claims for fees against Perma.	
[illegible]-70	Pltff to answer the deft's motion for summary judgment is extended to 12-15-69. No further extensions will be granted. It is so Ordered. Bryan, J.	

DATE	PROCEEDINGS
Nov 2- 70	Filed Pltff's Notice to take deposition of Alfred di Scipio on Nov. 19-1970
Dec 3- 70	Filed Pltffs' affdvt, exhibits & application for an order authorizing pltff to depose the Singer Co., deft. herein by Mr. Albert Romel and Robert Kloby.
Dec 15- 70	Filed Affdvt of William Chanler, atty for deft, re: re-examination of employee
Jan 6 71	Filed Pltff's affdvt of Paul R Grand in reply to deft's affdvt. & in support o pltff's application to depose The Singer Co. by Albert Romel & Robt. Kloby.
Jan 6- 71	Filed Order that pltff shall file a note of issue within 90 days or action to dismissed -- Sugarman, Ch J. (mailed notice)
Jan 6- 71	Filed Memo Endorsed on application filed Dec 3-70, "Motion withdrawn in light 90 day order entered this date. So Ordered: Sugarman Ch J.
Feb 3 71	Filed Stipulation & Order that the transcript of testimony of Shirley James Murphy, taken by pltff on Nov. 23-24 1970shall be signed but need not be si and sworn to in the presence of a notary public. So Ordered - Bryan, J.
Feb 10 71	Filed Stipulation & Order that the time within which the transcript of testimon of John Fecko, taken by pltff shall be signed & sworn to, is hereby ext. to 4-1-71. So Ordered --- Wyatt, J/
Apr 2 71	Filed Stip & Order the time within which the transcript of the testimony of Shi James Murphy, taken by pltff on 11-23,24-70 is to be signed is hereby ext. t Apr. 30 1971 So Ordered - Cooper J.
Apr 5 71	Filed Pltff's NOTE OF ISSUE & statement of readiness.
Apr 29 71	Filed Order pursuant to calendar rules 6 & 13.....Sugarman Ch J.
May 5, 71	Filed Deft's designation of trial counsel.
May 6 71	Filed Pltff's designation of trial counsel.
May 24-71	Filed deft's application to extend time for pltff & deft to file pre trial memorandum & exchange list of exhibits etc.
May 24-71	Filed memo endorsed on application filed this date---Application granted exter time to file pre trial memorandum to 7-30-71-So ordered-McLean,J. m/n
Jul 29-71	Filed stip & order that time for parties to meet for purpose of exchanging exh lists & witnesses is ext. from 7-30-71 to 9-30-71-So ordered-Lasker,J
OCT 1 71	Filed Pltff's List of proposed trial witnesses in its direct case.
OCT 1 71	Filed Pltff's List of proposed trial exhibits for its direct case.
NOV 12 71	Filed Supplemental designation of pltff's proposed trial exhibits,
APR 4 72	Filed Consent Pre-Trial Order. ---- McLean J.
May 18 72	Filed Stipulation that deft serve & file on 5-23-72 the memo discussed at pre trial conference before McLean J. on 4-14-72. Pltff will serve its answeri memo on 6-21-72. Deft will serve its reply memo on 6-28-72.
JUL 20 72	Filed Second Supplemental pre-trial memorandum submitted by Pltff.
Jul 28-72	Filed Record of Transcript dated July 5-1972.
Nov.17,72	Filed Transcript of Record of Proceedings dated 7/5/72,10:00 A.M.
Jul 27-73	Filed deft's supplemental designation of deft's proposed trial exhibits.
Sep28-73	Filed deft's supplemental pre-trial order. So ordered DUFFY, J.
Oct.2-73	Filed deft's notice of designation of trial counsel.
Oct.5-73	Filed pltff's affdvt. and notice of motion for an order directing a separate trial for the issue of damages. Ret. 10-12-73.
Oct. 5-73	Filed pltff's memorandum of law in support of bifurcation of trial.
Oct 5-73	Filed defts supplemental designation of witness.
Oct. 9-73	Filed pltff's supplemental designation of witness.
Oct. 11-73	Filed deft's affdvt. in opposition to motion for bifurcation of trial.
Oct. 11-73	Filed deft's memorandum in opposition to bifurcation of trial.
Oct. 19-73	Filed memo endorsed on motion filed 10-5-73. The motion for bifurcation of trial is denied. So ordered- DUFFY, J. mailed notice.
Oct. 23-73	Filed deft's supplemental designation of proposed trial exhibits.
Oct. 26-73	Filed deft's tentative requests to charge.

(CONT'D ON OTHER SIDE-- PAGE # 5)

DATE	PROCEEDINGS	Date Order Judgment N
Oct. 29-73	Filed deft's supplemental designation of proposed trial exhibits.	
Oct. 30-73	Filed designation of depositions for use on pltff's direct case.	
Nov. 1-73	Filed pltff's proposed requests to charge.	
Nov. 5-73	Filed deft's supplemental Voir Dire questions.	
Nov. 2-73	Filed pltff's suggestions for Voir Dire of prospective jurors.	
Nov. 5-73	Filed pltff's supplemental designation of proposed trial exhibits. (paper # 1)	
Nov. 5-73	Filed pltff's supplemental designation of proposed trial exhibits. (paper # 2)	
Nov 26 73	Filed in court Deft's suppl. designation of proposed trial exhibits.	
Nov 26 73	Filed in court Deft's memo in support of the admission of evidence relating to the intent of the parties when they entered the December contract.	
Nov. 30-73	Filed deft's memorandum in support of the admission of evidence relating to the intent of the parties when they entered the December contract.	
Nov. 5-73	Before DUFFY, J. Jury trial begun & cont'd. Adjourned to 11-7-73	
Nov. 7-73	Trial cont'd	
Nov. 8-73	Trial cont'd	
Nov. 9-73	Trial cont'd and adjourned to 11-12-73	
Nov. 12-73	Trial cont'd	
Nov. 13-73	Trial cont'd	
Nov.14-73	Trial cont'd	
Nov.15-73	Trial cont'd. Both sides stipulate to continue trial without a Jury. Jury discharged. Trial adjourned to 11-19-73	
Nov.19-73	Trial cont'd.	
Nov. 20-73	Trial cont'd.	
Nov. 21-73	Trial cont'd. Adjourned to 11-26-73	
Nov. 26-73	Trial cont'd	
Nov. 27-73	Trial cont'd	
Nov 28-73	Trial cont'd.	
Nov. 29-73	Trial cont'd.	
Nov.30-73	Trial cont'd. Adjourned to 12-3-73.	
Dec. 4-73	Filed in Court 11-26-73. Deft's supplemental designation of proposed exhibits.	
Dec. 4-73	Filed in Court 11-26-73. Memorandum in support of the admission of evidence relating to the intent of the parties when they entered the December contract.	
Dec 7-73	Filed supplemental designation of defts proposed trial exhibits.	
Dec. 4-73	Trial cont'd	
Dec. 5-73	Trial cont'd	
Dec. 6-73	Trial cont'd	
Dec. 7-73	Trial cont'd.--adj. to 12-12-73	
Dec. 12-73	Trial cont'd-adj. to 12-14-73	
Dec. 14-73	Trial cont'd- adj. to 1-4-74	
Jan. 4-74	Trial cont'd- adj. to 1-8-74	
Jan. 8-74	Trial cont'd.- adj. Sine Die	
Jan. 15-74	Filed transcript of record of proceedings of 11-5,7,8,9,12, 13, 14-73	
Jan. 15-74	Filed transcript of record of proceedings of 11-29, 30, 12-3, 4, 5, 6, 7-73	
Jan. 15-74	Filed transcript of record of proceedings of 11-15, 19, 20, 21, 26, 27, 28-73	
Jan. 15-74	Filed transcript of record of proceedings of 12-12, 13-73	
Apr. 12-74	Filed deft's amended designation and counterdesignation of depositions in support of deft's case.	
Apr. 12-74	Filed deft's proposed objections to pltff's designations.	
Apr. 12-74	Filed deft's memorandum in support of deft's counterdesignations.	

(CONT'D - PAGE #6)

D. C. 110 Rev. Civil Docket Continuation

DATE	PROCEEDINGS
Apr. 1-74	trial cont'd from 1-8-74
Apr. 2-74	trial cont'd
Apr. 3-74	trial cont'd
Apr. 4-74	trial cont'd- adjourned to 4-15-74
Apr. 15-74	trial cont'd- adjourned to 4-17-74
Apr. 17-74	trial cont'd
Apr. 18-74	trial cont'd
Apr. 23-74	trial cont'd
Apr. 24-74	trial cont'd
Apr. 25-74	trial cont'd- adjourned to 5-1-74
May 1-74	trial cont'd - 5/2, 5/3/, 5/6, 5/7,5/8, 5/9, 5/13, 5/14, 5/15, 5/16,5/17, 5/20
May 23-74	trial cont'd- 5/24- 5/28, 5/29, 5/30, 5/31 and adjourned to 6/1/74
June 3-74	trial cont'd- 6/4-6-5, 6/6, 6/10, 6/11, 6/12, 6/13, 6/14, 6/17, 6/18, 6/24, 6/2
June 26-74	trial cont'd-6/27
June 28-74	trial cont'd and concluded. (total-70 days). Proposed findings of fact and con of law, briefs to be submitted 9-30-74.
July 23-74	Filed transcript of proceedings dated 6-4-5-10-11-12-74
July 23-74	Filed transcript of proceedings dated 6-13-14-17-18-24-74
July 23-74	Filed transcript of proceedings dated 5-6-7-8-9-13-14-15-16-17-74
July 23-74	Filed transcript of proceedings dated 4-17-18-23-24-25-74-5-1, 2,3-74
July 23-74	Filed transcript of proceedings dated 6-25, 26, 27, 28-74
July 23-74	Filed transcript of proceedings dated 5-20, 22, 24, 28, 29, 30, 31-74 and 6-3-74
July 23-74	Filed transcript of proceedings dated 1-4, 8-74 and 4-1, 2, 3, 4, 15-74
Nov. 20-73	(Filed in Court-) Corrections of deft's designations of depositions.
Nov. 20-73	(filed in Court)- Designation and counter designation of depositions in support of deft's case (corrected)
May 2-74	(filed in Court)- memorandum in support of deft's motion to dismiss at the close of pltff's direct case.
Sept 30 74	Filed Deft's post-trial brief m/.
Sept 30 74	Filed Deft's proposed conclusions of law.
Sept 30 74	Filed Deft's proposed findings of fact.
Oct. 1-74	Filed affdvt. of service by an individual on 9-30-74 served deft's post trial brief, etc.
Oct. 25-74	Filed Errata to deft's post trial brief, proposed findings of Fact and conclusion of law.
Apr. 11-75	Filed Opinion #42235- for the reasons stated, I find for the pltff. on the claim that was tried. I also find that the counterclaim advanced by deft. w totally sham as a matter of fact. This opinion is to be considered findings and conclusions as required by Rule 52 FRCP. Judgment will enter for the pltff. in accordance with this opinion along with interest to be calculated at the legal rate on a monthly basis from the date of the incurrence of dama awarded. The deft. is to bear the entire costs. Settle judgment on notice. DUFFY, J. (m/n)
Apr. 16-75	Filed pltff's post-trial memorandum incorporating proposed findings of fact and conclusions of law.
May 2-75	Filed pltff's notice of motion for an order to conform arithmetic calculations of damages to the Court s findings of fact. Ret. 5-13-75
May 2-75	Filed pltff's memorandum in support of its proposed judgment, its related motio and its Bill of Costs.
May 7-75	Filed deft s proposed findings of fact.
May 8-75	Filed deft s memorandum in opposition to pltff's proposed judgment, pltff s related motion and pltff's bil of costs.
May 27-75	Filed memo endorsed on motion filed 5-2-75. Motion denied . So ordered- DUFFY,

(CONTIN--- PAGE # 7-- other side)

DATE	PROCEEDINGS	Date Judgt.
June 2-75	Filed Judgment # 75, 491-- ordered that the aforesaid motion of pltff. is denied- that pltff. recover from the deft. the principal sum of $ 5,333,123.94, together with interest through 5-15-75 in the amount of $ 1,521,165.42, and after 5-15-75 to the date of entry of judgment at the daily rate of 3888.90, together with the entire costs of this action- and that deft's counterclaim is dismissed on the merits. DUFFY, J. Judgment entered-6-3-75. Clerk (m/n)	
June 4-75	Filed pltff's reply memorandum to deft's memorandum in opposition to pltff's proposed judgment.	
June 4-75	Filed pltff's memorandum in support of its proposed judgment, its related motion and its bill of costs.	
June 4-75	Filed deft's memorandum in opposition to pltff's proposed judgment, pltff's related motion, and pltff's bill of costs.	
June 4-75	Filed pltff's notice of entry of a true copy of the Judgment after trial entered on 6-3-75.	
June 13-75	Filed Supersedeas Bond in the total sum of $ 7,527,591.53- Federal Insurance Co.	
June 13-75	Filed deft's notice of filing supersedeas Bond.	
June 13-75	Filed deft's notice of appeal from Judgment after trial dated 5-29-75 and entered 6-3-75- that part of the Order & Judgment dated 8-11-68 and entered 8-13-68- the decision & order dated and filed 1-27-70- the decision and order dated 5-14-70 and filed 5-15-70 and the supplementary pre-trial order dated and filed 9-28-73. Copy mailed to: Poletti Freidin Prashker Feldman & Gartner. Ent. 6-13-75.	
Sep. 30-75	Filed deft's proposed conclusions of law.	
Sep. 30-74	Filed deft's proposed findings of fact.	
June 16-75	Filed Amended Judgment # 75,528 After Trial-- ordered that the aforesaid motion of pltff. is denied-- that pltff. recover from deft. the principal sum of $5,333,123.94, together with interest through 5-15-75 in the amount of $1,529,514.3 and after 5-15-75 to the date of entry of judgment at the daily rate of $1,137.39 together with the entire costs of this action-- and that deft's counterclaim is dismissed on the merits. DUFFY, J. Judgment entered 6-16-75. Clerk (m/n)	
June 17-75	Filed Bill of Costs on Judgment # 75, 528 as taxed in the sum of $20,728.00 in favor of pltff.	
June 19-75	Filed pltff's notice of entry of a true copy of Amended Judnent # 75,528 filed on 6-16-75	
June 23-75	Filed deft's amended notice of appeal from the Judgment after trial dated 5-29-75 and entered on 6-3-75 as amended by the Amended Judgment after trial dated 6-13-75 and entered on 6-16-75- that part of the Order and Judgment dated 8-11-68 and entered 8-13-68- the decision and order dated and filed 1-27-70- the decision and order dated 5-14-70 and filed 5-15-70 and the supplementary pre-trial order dated and filed on 9-28-73. Copy mailed to: Poletti Freidin Prashker Feldman & Gartner. Ent. 6-23-75	
June 23-75	Filed stip & order that the supersedeas bond in the sum of $ 7,527,591.53 filed on 6-13-75 is cancelled and discharged. Clerk	
June 23-75	Filed Supersedeas Bond in the sum of $ 7,657,360.08- Federal Insurance Company	
June 24-75	Filed deft's notice of entry of a true copy of supersedeas bond filed on 6-23-75	
July 3-75	Filed pltff's notice of cross-appeal from so much of the Amended Judgment dated 6-13-75 and entered 6-16-75 as denies pltff's motion for an order conforming the arithmetic calculations as indicated. Copy to: Winthrop Stimson Putnam & Roberts. Ent. 7-3-75	

A TRUE COPY
RAYMOND F. BURGHARDT, Clerk
By _____
Deputy Clerk

COMPLAINT, DATED MARCH 9, 1966, EXCLUSIVE OF EXHIBITS (SEE PLAINTIFF'S EXHIBIT 35 PAGE 378 OF EXHIBIT BINDER, PLAINTIFF'S EXHIBIT 60A, PAGE 462 OF EXHIBIT BINDER) (R 1 PORTION)

[R 1, p 1]

UNITED STATES DISTRICT COURT FOR THE

SOUTHERN DISTRICT OF NEW YORK

PERMA RESEARCH & DEVELOPMENT COMPANY,	:	
Plaintiff,	:	Civil Action File No.
v.	:	Complaint
THE SINGER COMPANY,	:	66 Civ. 665
Defendant.	:	

1. Plaintiff corporation is a citizen of the state of Delaware having its principal place of business at 345 E. Washington Street, North Attelboro, Massachusetts and Defendant corporation is a citizen of the state of New Jersey having its principal place of business at 130 Rockefeller Plaza, New York, New York. The matter in controversy, exclusive of interest and costs exceeds the sum or value of $10,000.

FIRST COUNT

1. On the 18th day of June, 1964, Defendant corporation made a written contract with Plaintiff corporation, of which exhibit "A", hereto annexed, is a copy.

[R 1]

2. Thereafter and before the 21st day of December, 1964, the Plaintiff duly performed all the conditions thereof on its part. Pursuant to the contract hereto annexed marked exhibit "A" the Defendant corporation was bound to manufacture a product developed by the Plaintiff corporation, in accordance with specifications and blueprints furnished by the Plaintiff corporation; the Defendant corporation, pursuant to this agreement was bound to provide diligent quality control in the production, assembly, testing and packaging of the product; pursuant to said agreement, said Defendant corporation was to deliver completed product to distributors as designated by the Plaintiff corporation. On or about July 27, 1964 the Defendant corporation had manufactured a certain number of units herein before referred to as product; said units as manufactured were defective as a result of inadequate quality control on the part of the Defendant corporation; the Plaintiff corporation had made known the defect to the Defendant corporation and the Defendant corporation over the objection of said Plaintiff corporation did ship 500 units to the Plaintiff corporation's distributor in Ohio; to date, the Defendant corporation has refused consistently to remedy the inadequate quality control and has therefore committed a breach of its contract with the Plaintiff corporation.

[R 1]

3. As a result of said breach of contract on the part of the Defendant corporation, the Plaintiff corporation was put to great expense, suffered monetary loss, and was unable to fulfill its contractual obligations entered into with its distributors for delivery of said product to the extent of 41 million dollars.

[R 1, p 2]

SECOND COUNT

1. On or about December 21, 1964 as a result of the breach herein alleged and as a result of adverse financial condition of the Plaintiff resulting from said breach, the Defendant corporation and the Plaintiff corporation entered into a new agreement purporting to cancel the contract of June 18, 1964 heretc annexed and marked exhibit "B".

2. Said agreement was procured by fraud and misrepresentations on the part of the Defendant corporation and its agents as to its intentions and ability to market said product.

3. Whereas both Plaintiff corporation and Defendant corporation were bound to performance under the contract of June 18, 1964 hereto annexed marked exhibit "A" and the agreement here in question merely purported to relieve the Defendant corporation of any and all responsibility for manufacture, there was no consideration for said agreement

[R 1]

on the part of the Defendant corporation.

4. That under the terms of the agreement hereto annexed marked exhibit "B" the Defendant corporation was not bound to perform any covenants or agreements and retained complete discretion as to marketing and manufacturing. The contract itself was illusory and therefore void.

5. As a result of the misrepresentation and fraud of the Defendant corporation and as a result of the failure of consideration and the illusory nature of the agreement heretofore annexed marked exhibit "B" the Plaintiff claims damages in the sum of 41 million dollars.

Wherefore the Plaintiff demands judgment:

A) That the contract of December 21, 1964 be declared null and void and that the Defendant corporation be ordered to pay to the Plaintiff corporation the sum of 41 million dollars as damages.

B) That the Defendant corporation be ordered to specifically perform its warranties, covenants and agreements of manufacture of the contract dated June 18, 1964 and be further ordered to pay to the Plaintiff corporation the sum of 41 million dollars in damages.

C) That the Plaintiff corporation may have such further and other relief as may be just.

And in the alternative, if it be determined that the contract of December 21, 1964 be valid, Plaintiff demands

[R 1]

judgment upon this contract for breach and non-performance thereunder in the amount of 41 million dollars.

[R 1, p 3]

By its attorneys
Matson, Kass & Goodkind

By

/s/ William A. Kass
60 East 42nd Street
New York, New York 10017
TN-7-8570

Plaintiff corporation herein demands a jury trial of all issues involved now or hereafter in the above cause.

By its attorneys

/s/ William A. Kass
Matson, Kass & Goodkind
60 East 42nd Street
New York, New York 10017
TN-7-8570

[R 1]

ANSWER, DATED APRIL 20, 1966, EXCLUSIVE OF EXHIBIT (SEE PLAINTIFF'S EXHIBIT 60A, PAGE 462 OF EXHIBIT BINDER) (R 4 PORTION)

[R 4, p 1]

UNITED STATES DISTRICT COURT

SOUTHERN DISTRICT OF NEW YORK

- -x

:

SAME CAPTION :

:

:

- -x

The defendant, The Singer Company, by its attorneys, Winthrop, Stimson, Putnam & Roberts, for its answer herein, states as follows:

1. Admits that it is a citizen of the State of New Jersey, avers that its principal place of business is 30 Rockefeller Plaza, New York, New York, admits that the matter in controversy, exclusive of interest and costs, exceeds the sum or value of $10,000, and denies having knowledge or information sufficient to form a belief as to the truth or falsity of the remaining allegations of paragraph 1 of the complaint.

ANSWERING THE FIRST COUNT ALLEGED IN THE COMPLAINT:

2. Answering the allegations of paragraph 1 of

the First Count, defendant admits that on the 18th of June, 1964 defendant entered into the written contract with plaintiff annexed to the complaint as Exhibit A.

3. Answering the allegations of paragraph 2 of the

[R 4, p 2]

complaint, defendant refers to the said contract of June 18, 1964, for its terms and provisions, and admits that on or before July 27, 1964 defendant had assembled a certain number of the units referred to in the complaint as "product", said "product" being an "anti-skid" device developed by plaintiff in an effort to lessen the danger of skidding in automobiles by preventing the wheels from locking upon application of the brakes. Defendant alleges that it assembled such units from component parts furnished to it by plaintiff's former suppliers, that one of such parts was found to be defective and thereupon at plaintiff's request, defendant substituted a new component part furnished to it by plaintiff in the assembly of the product, and thereafter, at the express written direction and order of plaintiff, defendant shipped 500 of said units including the new component supplied by plaintiff as aforesaid, to plaintiff's distributor in Ohio. Defendant further alleges that after the delivery of the said 500 units numerous defects in the plaintiff's design of the product were discovered as the result of reports from the field and from tests conducted by defendant's Quality Control Division in collaboration with plaintiff's engineers,

including defects in the 500 aforementioned components supplied by plaintiff, and that between the said 27th of July and the 2nd of December, 1964, plaintiff ordered at least 12 design changes intended to correct such defects. Defendant further alleges that new units were assembled by defendant in accordance with the said design changes ordered by plaintiff, approved by plaintiff, and sent to plaintiff's Ohio distributor as replacements for the aforementioned 500 units delivered on July 27th. Except as

[R 4, p 3]

herein expressly admitted, defendant denies each and every allegation of paragraph 2 of the First Count.

4. Defendant denies each and every allegation of paragraph 3 of the First Count.

AS A FIRST AFFIRMATIVE DEFENSE TO
THE FIRST COUNT OF THE COMPLAINT:

5. Defendant alleges that the contract of June 18, 1964, the breach of which is alleged in the First Count of the complaint, was mutually rescinded, cancelled and deemed null and void and all rights and obligations of the parties thereunder were terminated by the express provisions of the contract of December 21, 1964 referred to in the Second Count of plaintiff's complaint, a true copy of which is annexed hereto as Exhibit A.

ANSWERING THE SECOND COUNT ALLEGED
IN THE COMPLAINT:

6. Defendant repeats and realleges each and every allegation contained in paragraphs 1 through 4 hereof as if set forth in full herein.

7. Answering the allegations of paragraph 1 of the Second Count, defendant admits that on or about December 21, 1964, it entered into a new agreement with plaintiff, cancelling the contract of June 18, 1964, but denies that Exhibit B of plaintiff's complaint sets forth such agreement in its entirety in that pages 1 through 12 of Schedule A to Exhibit 1 to such agreement are not attached to plaintiff's complaint and avers that the "Agreement and Release" dated December 21, 1964 by and between plaintiff, Worcester Stamped Metal Company and American Emblem Company, Inc. attached to the complaint, are not part of said agreement, and except as

[R 4, p 4]

expressly admitted herein, denies each and every allegation of paragraph 1 of the Second Count. A true copy of the said agreement of December 21, 1964 is annexed hereto as Exhibit A. Defendant refers to said agreement and the exhibits thereto for its terms.

8. Defendant denies each and every allegation of paragraphs 2 and 3 of the Second Count.

9. Answering paragraph 4 of the Second Count, defendant refers to the said agreement of December 21, 1964 for the terms thereof, and except as herein expressly admitted, denies each and every allegation of paragraph 4.

10. Defendant denies each and every allegation of paragraph 5 of the Second Count.

AS AND FOR AN AFFIRMATIVE DEFENSE TO EACH COUNT OF THE COMPLAINT AND A COUNTERCLAIM AGAINST PLAINTIFF PERMA RESEARCH & DEVELOPMENT COMPANY AND FRANK A PERRINO:

11. Defendant alleges that in order to induce Singer to enter into the contracts of June 18, 1964 and December 21, 1964, in part set forth in the plaintiff's complaint, plaintiff and Frank A. Perrino, a citizen of Rehoboth, Massachusetts (hereinafter "Perrino" and sought to be made a defendant herein) and other officers of plaintiff did the following acts:

(a) Plaintiff and Perrino and other officers and employees of plaintiff furnished defendant with a sixteen page printed report prepared by a purportedly indepen-

[R 4, p 5]

dent "Nonprofit Organization in the Interest of Automotive

Safety and Research", which described the product in glowing terms, described innumerable tests of its performance alleged to have been conducted by the said organization including photographs of such alleged tests and repeated statements and tables indicating that the product was entirely safe and would shorten the stopping distance of a car upon application of the brakes and at the same time improve steering stability. In truth and in fact the said tests had been conducted and the said report had been prepared by or under the direction of one of the founders, original directors and principal stockholders of plaintiff with the full knowledge and collaboration of Perrino and other employees of plaintiff, and was known by them to be false and misleading;

(b) Plaintiff failed to disclose to defendant that for a period of years prior to June 18, 1964 plaintiff had attempted to sell the said product to several of the leading automobile manufacturers in the country as well as other organizations interested in automotive safety devices; that such automobile manufacturers and organizations had conducted elaborate tests disclosing numerous basic defects in design in the said product and indicating that it lengthened instead of shortened the stopping distance of automobiles and in many other respects was unsafe for use in automobiles, and that none of them had been willing to purchase the same;

(c) Plaintiff and Perrino and other officers of plaintiff arranged for and conducted a false and fraudulent demonstration of the product as installed on a test

[R 4, p 6]

vehicle for the benefit of defendant and drove the vehicle in a manner to conceal the product's defects, with the intent to mislead defendant about the operating characteristics and the safety of the product;

(d) Plaintiff and Perrino and other officers of plaintiff failed to inform defendant of reports of customer experience revealing malfunctions and accidents with the product which had been reported to plaintiff prior to and after June 18, 1964 and which revealed inherent defects and dangers in the product's design, performance and safety;

(e) Plaintiff and Perrino and other officers of plaintiff furnished defendant with false and fraudulent advertising material on the product, which included misleading and inaccurate claims as to the ability of the product to produce a controlled, no-skid stop, as to the stopping distance required, and as to the fail-safe properties and overall safety of the product; and

(f) Plaintiff and Perrino and other officers of plaintiff falsely and fraudulently reported to defendant the alleged ease and speed of installation

and maintenance of the product, and the trouble-free operation of the product.

12. Each of the aforesaid statements and representations alleged in paragraph 11 were false and fraudulent and were known to plaintiff and Perrino and other officers of plaintiff to be false and fraudulent when made.

13. The failure of plaintiff and Perrino and

[R 4, p 7]

other officers of plaintiff as alleged above in paragraph 11 to inform defendant of material facts relating to the design, specifications, performance and testing of the product was fraudulent and was intentional on the part of plaintiff and Perrino and other officers of plaintiff, was in violation of its duty to inform defendant of material facts known to it, and was intended to and did induce defendant to enter into the said contracts with plaintiff.

14. Defendant believed the statements and representations made by plaintiff and said Perrino and other officers of plaintiff to be true and was induced thereby to enter into the said contracts and would not have entered into said contracts if it had known the true facts concerning the design, specifications, performance and testing of the product which were fraudulently concealed, suppressed and misrepresented by plaintiff.

[R 4]

15. Many of the misrepresentations alleged herein took place in New York and were fraudulent conduct on the part of Perrino in New York, and Perrino made and executed both contracts in New York.

16. Relying upon the said misrepresentations and concealments of known facts defendant expended large sums and time in collaboration with the said Perrino and plaintiff's engineers in testing and attempting to correct the many defects appearing from time to time in the said device until in March 1965 tests conducted by defendant, as well as reports received from the field, disclosed that the said product was inherently and basically defective in de-

[R 4, p 8]

sign and dangerous to life and limb. Thereupon defendant, in order to prevent the possibility of serious accidents, undertook at its own expense to recall and retrieve products previously sold to the public.

17. As a result of the foregoing acts of plaintiff and the said Perrino in fraudulently inducing defendant to spend time and money on the manufacture, distribution and sale, testing, recalling and retrieving said products, the defendant has suffered damages in the amount of $4,000,000.

[R 4]

WHEREFORE, defendant demands:

1. That the Court order Frank A. Perrino to be made an additional party defendant and to respond to the counterclaim against him herein.

2. That defendant have judgment on its counterclaim against plaintiff and against Frank A. Perrino for $4,000,000.

3. That the relief sought by plaintiff in its complaint be denied in its entirety, and the First and the Second Counts of plaintiff's complaint be dismissed with prejudice and with costs to the defendant.

Dated: New York, New York
April 20, 1966

WINTHROP, STIMSON, PUTNAM & ROBERTS
Attorneys for defendant,
The Singer Company

By /s/ W. C. Chanler
a member of said firm
Office and Post Office Address
40 Wall Street
New York, New York 10005

REPLY, DATED MAY 9, 1966 (R 5)

[R 5, p 1]

UNITED STATES DISTRICT COURT

SOUTHERN DISTRICT OF NEW YORK

- x

:

:

SAME CAPTION

:

:

- x

The plaintiff, Perma Research & Development Company, by its attorneys, Matson, Kass and Goodkind, for its reply to the defendant's counterclaim admits, denies and alleges as follows:

1. That plaintiff does not owe defendant the amount as alleged in defendant's counterclaim, or any amount, in so much as defendant was obligated by contract to expend time and money on the manufacture, distribution and sale, testing, recalling and retrieving said products, and in addition did retrieve and recall said products to insure itself against liability for its defective and negligent quality control which quality control it was obligated by contract to perform with diligence and without defect.

WHEREFORE, plaintiff demands judgment that the

counterclaim herein be dismissed with costs and disbursements.

Dated: New York, New York
May 9, 1966

MATSON, KASS AND GOODKIND
Attorneys for the plaintiff,
Perma Research & Development Company

By /s/ William A. Kass
a member of said firm
Office and Post Office Address
60 E. 42 Street
New York, New York

[R 5]

PLAINTIFF'S RULE 9(g) STATEMENT (R 11 PORTION)
(ATTACHMENT TO PLAINTIFF'S NOTICE OF MOTION
FOR SUMMARY JUDGMENT DATED MARCH 17, 1967)

[R 11, p 1]

UNITED STATES DISTRICT COURT
SOUTHERN DISTRICT OF NEW YORK

- x

:

:

SAME CAPTION

:

:

- x

This statement is submitted to the Court in compliance with Local Court Rule 9(g).

This is an action brought by the plaintiff, PERMA RESEARCH & DEVELOPMENT COMPANY ("PERMA") against defendant, THE SINGER COMPANY ("SINGER") alleging breach of contract and fraud. SINGER has brought a motion for summary judgment alleging that there are no genuine issues to be tried. The plaintiff, PERMA, contends that the following are genuine issues of material facts:

(1) That prior to the contract of June 18, 1964, PERMA furnished SINGER with sufficient material and workable units so that they would determine from their own research that the Anti-Skid Device was workable and, in fact, had been manufactured and used successfully.

(2) That the purpose of the agreement between

PERMA and SINGER was to obtain (a) a manufacturer of the unit, and (b) a manufacturer who could exercise the necessary quality control to determine that the parts furnished by suppliers of PERMA conformed to the specifications furnished by PERMA.

(3) That SINGER had the right to choose the suppliers of the component parts and to negotiate with them under the contract of June 18, 1964.

[R 11, p 2]

(4) That SINGER did not exercise the quality control necessary to manufacture this product, as had been promised by them, in that they allowed an inventory of 50,000 component parts to be delivered to them by a supplier in five separate deliveries during July, August and September of 1964, and the defects in these component parts should have been detected in the first delivery.

(5) That the delivery of 500 units to Ohio was made after PERMA principals, in agreement with a SINGER principal, had determined that these units were defective and SINGER was instructed not to deliver them.

(6) That there were no changes in basic designs and specifications, as alleged. The change-orders were recommended by PERMA, either because of improper methods of manufacture being used by SINGER or to facilitate production of the unit, and these change-orders were arrived at on request by SINGER and in compliance with Section 9 of the agreement of June 14, 1964.

[R 11]

(7) That, although SINGER has alleged that the Anti-Skid Device is not commercially feasible, devices based on a similar theory are presently used on commercial aircraft; by the Hydro-Aire Division of the Crane Company on truck units; and there are presently over 200 PERMA units being used in the New England area and have been used for some two to three years.

(8) That PERMA has never and does not contend that the Anti-Skid Device is 100% fail-safe, as this, in practice, is impossible, but has presented the Device as having a "fail-safe feature."

(9) That the contract of December 21, 1964 does not obligate SINGER to do anything and is, therefore illusory; was entered into without consideration; and PERMA was induced to enter

[R 11, p 3]

into the same through fraud and misrepresentation on the part of SINGER and its agents.

(10) That the effect of the contract of December 21, 1964 is that SINGER has acquired all of the patent rights formerly belonging to PERMA, all of the marketing rights (with no obligation to manufacture, market or pay royalties thereunder), that PERMA is left with a shell and only an obligation to pay SINGER the sum of $209,000.

(11) That, although SINGER, under the contract of December 21, 1964, purported to assume PERMA's contract

obligations, their disposition of these obligations has resulted in irreparable harm to PERMA and that SINGER has informed PERMA's customers that the unit is inherently defective and dangerous and PERMA would find it difficult to reestablish its reputation in the market, even if they recover their patent rights.

(12) That there is no evidence that the design of the unit is inherently defective and that full disclosure of all quality control problems and names of all persons testing the unit in the field had been disclosed to SINGER prior to the entering into of either of the above mentioned two contracts.

Respectfully submitted,

MATSON, KASS, GOODKIND & WECHSLER,
Attorneys for the Plaintiff,
60 East 42nd Street
Borough of Manhattan
New York, N.Y. 10017

By /s/ William A. Kass
Partner

D-251

UNITED STATES DISTRICT COURT
SOUTHERN DISTRICT OF NEW YORK

PERMA RESEARCH & DEVELOPMENT COMPANY,

Plaintiff,

-against-

THE SINGER COMPANY,

Defendant.

66 Civ. 665

OPINION

PERMA RESEARCH & DEVELOPMENT COMPANY,

Plaintiff,

-against-

THE SINGER COMPANY,

Defendant.

66 Civ. 666

APPEARANCES:

MATSON, KASS, GOODKIND & WECHSLER, ESQS.
New York City
Attorneys for Plaintiff
E. Robert Goodkin, Esq.
Of Counsel.

WINTHROP, STIMSON, PUTNAM & ROBERTS, ESQS.
Attorneys for Defendant
William C. Chanler, Esq.
JAMES T. BOORSCH, Esq.
Dean C. Rohrer, Esq.
Of Counsel.

O P I N I O N

BRYAN, District Judge:

These are companion actions, the first (66 Civil 665, referred to as Action No. 1), seeking damages for alleged breach of contract, and the second (66 Civil 666, referred to as Action No. 2) seeking injunctive relief.

The complaint in Action No. 1 is in two counts.

The first alleges breach of a contract dated June 18, 1964, between plaintiff, Perma Research & Development Company (Perma), and defendant, The Singer Company (Singer), whereby Singer agreed to manufacture and deliver to Perma's customers an apparatus known as "Perma Anti-skid Control," on which Perma held patents, for installation on automobiles. It is alleged that units of this device manufactured under the contract were defective due to Singer's failure to exercise adequate quality controls in the assembly and testing of the product as required by the contract and that some 500 of these defective units were delivered to Perma's distributors over its objection. Perma alleges that as a result of this breach it was unable to fulfil its contractual obligations with its distributors and suffered substantial damages.

The second count in Action No. 1 seeks to set aside a second agreement between the parties dated December 21, 1964,

-1-

[R 18]

which, among other things, terminated and cancelled the earlier June 18, 1964, agreement. The second count alleges that the December agreement was procured by fraud and misrepresentation, that it was entered into without consideration, and that it was illusory and therefore void. Judgment is sought (1) declaring that the December agreement is null and void; (2) for specific performance of the June agreement; and (3) for damages of $41,000,000.

The final paragraph of the complaint seeks additional relief by stating cryptically, "And in the alternative, if it be determined that the contract of December 21, 1964 be valid, Plaintiff demands judgment upon this contract for breach and non-performance thereunder in the amount of 41 million dollars."

The answer of Singer generally denies the allegations of the complaint and interposes a counterclaim for alleged false and fraudulent representations by Perma which induced it to spend time and money on the skid control device to its damage in the sum of $4,000,000.

The complaint in Action No. 2 seeks an injunction against the further shipping and delivery of units of the Perma Anti-Skid Control apparatus by Singer. The relief sought is predicated on the June 18, 1964 agreement under which Singer manufactured these units and ignores the December 21, 1964 agreement. The

answer generally denies the allegations of the complaint.

Defendant, Singer, has moved pursuant to Rule 56, F.R.C.P. for summary judgment dismissing the complaints in both actions and for summary judgment on its counterclaim in Action No. 1. Plaintiff, Perma, cross-moved for summary judgment on the second count in Action No. 1. Perma also has moved for leave to file an amended reply to the counterclaim in Action No. 1.

The factual background may be briefly summarized as follows:

The Perma Anti-Skid Control device, designed to prevent an automobile from skidding, was invented by Perrino, President of Perma. Perma had been working for some years and had spent substantial sums to perfect and market it. The device is a complicated mechanism with over 100 separate parts.

In June 1964, after Perma had sold a number of the devices which it had assembled, it entered into a contract with Singer under which Singer undertook to assemble the product from an inventory of component parts purchased from Perma's former suppliers. Singer agreed to exercise diligent quality control to determine that the components complied with specifications.

During six months of operation under this contract a number of defects in both quality and design were discovered. Various changes in design were made after consultation between Perma and Singer. During this period some 500 units were shipped

by Singer to Perma's distributor in Ohio. A number of these units were defective in various respects. Perma now claims that these defects were due to Singer's failure to exercise adequate quality control over the component parts. Singer, on the other hand, maintains that its controls were efficient and adequate and that the defects were due to faults of design in the component parts which Singer or Perma had discovered and which had to be replaced or corrected.

In any event, in December 1964 a new contract was entered into by the parties which cancelled the June contract. Under the December contract the patents for the device were assigned to Singer by Perma and Singer undertook to manufacture and market the product, paying royalties to Perma.

After substantial expenditures under this agreement and a number of tests and experiments, Singer claims that it concluded that the device was not fail-safe - that is to say, was without a feature which would restore the standard braking system of the automobile in the event of a mechanical failure of the device - and that the device was therefore unmarketable. A retrieval program was then instituted to get back all devices delivered to distributors or sold to the public by Singer and Singer advised Perma it would deliver no more devices and component parts until the device was made fail-safe.

After controversy had developed between the parties over the decision reached by Singer, Perma commenced the two actions at bar.

Singer's motion for summary judgment addressed to the complaint in Action No. 1 is predicated on two principal grounds. The first is that there was in fact no breach of the June 18, 1964 agreement as alleged. The second is that the June 18, 1964 agreement and all obligations thereunder were fully and finally terminated by the agreement of December 21, 1964, and that there is no basis in fact or law for setting aside the latter agreement which effectively bars suit upon the first. However, Singer does not address itself to Perma's claim of breach of the December agreement set forth in the final paragraph of the complaint.

Without suggesting that Singer's first ground is without merit, it is unnecessary to discuss that ground, since the second, insofar as it goes to the validity of the December 1964 agreement is dispositive of the motions for summary judgment addressed to Action No. 2 and to Counts 1 and 2 of Action No. 1.

By the December 21, 1964 agreement all patent rights to the Perma anti-skid control device were transferred to Singer and Singer agreed to manufacture and market the device and to pay royalties to Perma. There is no doubt that the December agreement effectively terminated the June agreement. It expressly provided

that the June agreement "should be deemed null and void and of no force or effect," and that "all rights and obligations of the parties thereunder were terminated" with the exception of specified [illegible] items not relevant here.

Thus, any rights which Perma might have had to sue on the June agreement are effectively barred by the December agreement as long as it remains in force and effect. 1/ It is plainly for this reason that Perma in the second count of its complaint seeks a declaratory judgment setting aside the December agreement and declaring it null and void. Unless Perma can succeed in setting aside the December agreement it has no claim for relief on the first count for breach of the June agreement.

In the second count Perma alleges three grounds for setting aside the December agreement: (1) that there was no consideration for the agreement on Singer's part; (2) that the agreement was illusory and therefore void; and (3) that Perma was induced to enter into the agreement by fraud and misrepresentation on the part of Singer.

1. Alleged lack of consideration.

The December agreement expressly provides that it is to be governed by New York Law. It was an agreement in writing to

---

1/ See 5A Corbin, Contracts § 1236 (1964).

discharge the June agreement signed by Perma, the party against whom the discharge is sought to be enforced. Under New York G.O.L. Section 5-1103, such a contract "shall not be invalid for lack of consideration." Thus, the June agreement was effectively terminated whether or not there was consideration for the December agreement.

But quite apart from this there was ample consideration for the December agreement.

Singer assumed loans and obligations of Perma in the amount of $209,000 in return for which Perma gave Singer a five year non-interest bearing promissory note. A check for $24,000 was delivered to Perma at the closing. Singer assumed Perma's current liabilities to third parties in the amount of $85,000 and also Perma's four principal distributorship contracts. Finally, Singer was required to pay Perma royalties. All this is clear from the face of the contract and was admitted by Perrino, Perma's President, on deposition. Indeed, it could not well have been denied.

There is no factual or legal basis for the contention that the December 1964 contract lacked consideration.

2. Alleged illusory nature of the December Contract

Perma's theory, as stated in the complaint, is that the

agreement is illusory because "Singer was not bound to perform any covenants or agreements and retained complete discretion as to manufacturing and marketing." However, on his deposition Perrino admitted that Singer had performed a number of the covenants and agreements contained in the December contract.

In any event, regardless of specific promises in the agreement, there can be no doubt that there was an obligation on Singer's part under the agreement to use its best efforts to manufacture and market the product. See Wood v. Lucy, Lady Duff Gordon, 222 N.Y. 88 (1917). See also Bruce & Co., Inc. v. Simpson & Co., Inc., 40 Misc. 2d 501, 504 (S. Ct. 1963); Franklin Research & Development Corp. v. Swift Electrical Supply Co., 340 F.2d 439, 443, n. 3 (2d Cir. 1964). Moreover, it appears from the papers before me that Singer did in fact spend substantial time and money in manufacturing, testing, research and marketing of the device.

Finally, Paragraph 10 of the contract provides for a "reversion right" to Perma under which Perma could recover the rights to the device if Singer did not spend more than $100,000 per year in marketing it. Perrino claimed that this reversion right was still in existence at the time when his deposition was taken. There is no legal or factual basis for Perma's second contention

either.

3. Fraud in the Inducement.

The only other ground on which Perma relies is that the December contract was induced by fraud and misrepresentation. This is categorically denied by Singer.

Perma has not only failed to show that there was any fraud or misrepresentation but in effect admits that there was none.

Perma alleges in the second count in Action No. 1 that the December agreement "was procured by fraud and misrepresentation on the part of" Singer "as to its intentions and ability to market the product." Perrino, the President of Perma, on his deposition taken by Singer, was unable to point to any evidence to support that charge.

When asked what the basis was for the charge Perrino replied that he had been told that more time and money would be spent on engineering and marketing, that there was "less time and money spent after the signing of the December agreement than there was previously," 2/ that he did not know how much time and money had been spent under either agreement, but that "everything else pointed to the fact that they did not intend to do what they said

2/ Deposition of Perrino, p. 420.

they were going to do." 3/

Further, Perrino said that "although they [Singer] said they would market the product, they did not. They, in fact, turned this over to an independent organization which was previous our own distributor, where he stated himself that he did not have the assets to market the product nationally." 4/ Apart from the hearsay in this statement it may be noted that under the December agreement Singer had the right to determine the method of manufacturing, exploiting and marketing the product "in its absolute discretion."

Even if Perrino's claims were taken as true this would not constitute fraud in the inducement under New York law. Were there an intention not to perform terms of the December agreement on Singer's part, followed by non-performance, this would not give rise to an action for fraud but to an action for damages for breach of the agreement. As was said in Briefstein v. Rotondo Co., 8 A.D.2d 349 at 351, 187 N.Y.S.2d 866, at 868 (1st Dept., 1959):

> "To say that a contracting party intends when he enters into an agreement not to be bound by it is not to state 'fraud' in an actionable area, but to state a willingness to risk paying damages for breach of contract.

3/ Deposition of Perrino, p. 420.

4/ Id. at 420-21.

> "If a man makes a contract intending to breach it he would expect to pay the price which such a course incurs by the usual rules of law under which contracts are afforded judicial enforcement. An intention not to perform does not bring on heavier damages than actual nonperformance. The policy which runs through the fabric of the law of contracts is to bind a party by what he agrees to do whether or not he intends to do what he agrees.
>
> "Implicit in the policy sanctioning the formalization of contractual undertakings is precaution against an existing intention not to be bound by the agreement as well as a future change of mind about being bound by it. Actionable relief hangs on breach; and under the facts here pleaded, relief does not lie for fraud resting on an intention not to perform."

See also Leventhal v. Martin, 25 A.D.2d 508, 266 N.Y.S.2d 774 (1st Dept. 1966).

The facts in Briefstein were quite different from those in such cases as Sabo v. Delman, 3 N.Y.2d 155, 164 N.Y.S.2d 714 (1957), where it was said that a promise "actually made with a preconceived and undisclosed intention of not performing it * * constitutes a misrepresentation of a material existing fact upon which an action for rescission may be predicated." Id. at 160, 165 N.Y.S.2d at 716. Sabo v. Delman was concerned with fraudulent promises as to collateral matters not included within and outside

the terms of the contract which were given to induce the party seeking rescission to enter into the contract. In Briefstein, on the other hand, plaintiff, as the plaintiff here, simply claimed that defendant never intended to carry out the promises which he had made under the actual terms of the contract itself. 5/

Moreover, Perrino's testimony on deposition demonstrates there is no evidence of an intention by Singer not to perform the contract. When Perrino was asked how he knew "that Singer had no intention to market the product" at the time it negotiated and signed the contract, he replied "There is no way of me knowing exactly what their intention was at the time they said it, except that they promised certain things when everything else points to the fact that they did not intend to do what they said they were going to do." 6/ Perrino was then asked "What points to that fact that you allege?" 7/ His response resolved itself into nothing more than claims of non-performance by Singer. 8/

5/ It may be noted that Briefstein does not conform to either the Restatement of Contracts or the Restatement of Torts. See Restatement, Torts, § 530 Comment b; Restatement, Contracts, § 473.

6/ Deposition of Perrino, p. 420.

7/ Ibid.

8/ Id. at 420-22.

A mere showing of non-performance of a promise without more is insufficient to support a claim of fraud in the inducement See Restatement, Torts, § 530 Comment c; Restatement, Contracts § 473 Comment c; Adams v. Clark, 239 N.Y. 403 at 410 (1925). See also Prosser, Torts, § 90 at p. 565 (2d ed. 1955). Nothing more than that was shown here.

The only affidavit in opposition to Singer's motion for summary judgment is that of Perrino in support of Perma's cross-motion for the same relief on Count 2. It wholly fails to present any evidence of fraud in the inducement of the December contract. The conversations which Perrino claims to have had with various persons connected with Singer do not support the claim that there was no intention on Singer's part to perform when it entered into the December contract, much less establish any fraudulent misrepresentations. Perrino's affidavit is insufficient to raise any material issues of fact. Nor does it cast any doubt on his admission at his deposition that Singer and Perma were engaged in joint efforts looking toward the perfection and marketing of the device for some six months after the December agreement was entered into, and up to the time that Singer lost confidence in the device.

In any event, it appears that there was a substantial measure of performance of the December agreement by Singer. The real issue between the parties is over the adequacy of such per-

formance under the terms of the contract. It is plain that this controversy is not as to fraud in the inducement, but as to whether or not the December contract was breached.

There are no material issues of fact to be tried with respect to the claim in the second count in Action No. 1 for rescission of the December agreement and Singer is entitled to summary judgment on that claim. Perma's cross-motion for summary judgment in the second count in Action No. 1 is wholly without merit and must be denied.

The first count based on alleged breach of the June, 1964 contract therefore automatically falls since any such claim is barred by the subsisting December 1964 agreement and Singer is entitled to summary judgment on the first count of Action No. 1 also. The same result follows with respect to Action No. 2 for injunctive relief based solely upon the June agreement. Singer's motion for summary judgment dismissing the complaint in Action No. 2 will be granted.

There remains the claim asserted in Count 2 of Action No. 1 for breach of the December 1964 contract as distinguished from the claim for rescission. It will be recalled that this claim is alleged in the following language:

> "And in the alternative, if it be determined that the contract of December 21, 1964 be valid, plaintiff

demands judgment upon this contract for breach of non-performance thereunder in the amount of 41 million dollars."

This can scarcely be said to be an artistic way to allege a substantial claim for breach of contract. However, if the quoted paragraph be read in conjunction with other allegations of Count 2, it is barely sufficient to withstand a motion to dismiss and must be held to state a viable claim for relief for breach of contract. As Professor Moore has stated;

> "* * * The courts have ruled again and again that a motion to dismiss for failure to state a claim should not be granted unless it appears to a certainty that plaintiff would be entitled to no relief under any state of facts which may be proved in support of his claim." 2A, Moore's Federal Practice, ¶ 8.13 at page 1705-07.

See also DioGuardi v. Durning, 139 F.2d 774 (2d Cir. 1944).

Singer has not addressed itself directly to the claim for breach of the December agreement nor has Perma. In the present posture of this action and on the papers before me Singer has not demonstrated that there are no material issues of fact as to this claim which require trial and summary judgment on the claim must therefore be denied.

Finally, there are Singer's motion for summary judgment on its counterclaim in Action No. 1, and Perma's motion for leave to serve an amended reply to that counterclaim.

Singer's counterclaim alleges a series of fraudulent acts and representations on the part of Perma which induced Singer "to spend time and money on the manufacture, distribution and sale, testing, recalling and retrieving" of the anti-skid device to its damage in the sum of $4,000,000. The original reply to the counterclaim was inartistically drawn, to say the least, and it can be argued with some persuasiveness that it is not an effective denial sufficient to place in issue the material allegations of the counterclaim. However, Perma has moved for leave to serve an amended reply which places in issue such material allegations.

Singer urges that service of the proposed amended reply should not be permitted, not only because it is untimely but because a number of its allegations are inconsistent with the record thus far made on the depositions taken by the parties. However, in view of the liberal policy favoring amendments, I do not think that Perma should be foreclosed from filing its amended reply and leave is granted to do so.

In the light of the issues raised by the amended reply it cannot be said on the record before me that there are no material issues of fact to be tried with respect either to Perma's liability on the counterclaim or to the important question of Singer's damages. Singer's motion for summary judgment on its

counterclaim will therefore be denied.

Settle order on notice embodying the decisions reached in this opinion.

Dated: New York, N.Y.
March 29, 1968

/s/ Edward D. Re
United States District Judge

DEFENDANT'S NOTICE OF MOTION FOR REARGUMENT DATED APRIL 11, 1968, WITH MEMORANDUM ENDORSEMENT (PER BRYAN, J.) DATED JULY 11, 1968 (R 19)

[R 19, p. 1]

UNITED STATES DISTRICT COURT

SOUTHERN DISTRICT OF NEW YORK

- x

:

SAME CAPTION :

:

:

- x

SIRS:

PLEASE TAKE NOTICE that, on all the pleadings, the Memorandum of Law submitted herewith in support hereof and on all the papers filed in this action, the undersigned will bring its Motion for Reargument, pursuant to Rule 9(m) of the General Rules of this Court, of that part of the determination of the Honorable Frederick VP. Bryan, denying summary judgment, pursuant to Rule 56 of the Federal Rules of Civil Procedure, on the Second Count of the Complaint in the above-entitled action with respect to the allegation that Singer breached the contract entered into between the parties on December 21, 1964, (Opinion of Judge Bryan filed April 1, 1968, p. 15) in Room 506, United States Courthouse, Foley Square, City and County of New York, on the 23rd day

of April, at 10:00 o'clock in the forenoon of that day or as soon thereafter as counsel can be heard.

Further, the undersigned respectfully requests that this Court refer this Motion to the Honorable

[R 19, p 2]

Frederick [illegible] Bryan.

Dated: New York, New York
April 11, 1968

Yours, etc.

WINTHROP, STIMSON, PUTNAM & ROBERTS

By /s/ William C. Chanler
William C. Chanler
A Member of the Firm

Attorneys for Defendant
Office and Post Office Address
40 Wall Street
Borough of Manhattan
New York, New York 10005

TO:
MATSON, KASS, GOODKIND & WECHSLER
Attorneys for Plaintiff
60 East 42nd Street
New York, New York 10017

UNITED STATES DISTRICT COURT
SOUTHERN DISTRICT OF NEW YORK

PERMA RESEARCH & DEVELOPMENT COMPANY,

Plaintiff,

-against-

THE SINGER COMPANY,

Defendant.

NOTICE OF MOTION FOR REARGUMENT

[illegible], Simon, Reid & Harris,
Attorneys for Defendant,
The Singer Company
40 Wall Street,
Borough of Manhattan,
New York, N.Y. 10005

TELEPHONE
WHITEHALL 3-2700

Perma Research & Development Company v. The Singer Company
66 Civ. 665

BRYAN, District Judge:

Both plaintiff's and defendant's motions for reargument are granted. On reargument my original decision dated March 29, 1968, is adhered to.

It is so ordered.

Dated: New York, N.Y.
July 11, 1968

Frederick P. Bryan
United States District Judge

This Motion is Respectfully Referred
to Judge Bryan, with his consent.

John F. Dooling, Jr.
U.S.D.J.

[R 19]

ORDER AND JUDGMENT OF BRYAN, J., DATED AUGUST 11, 1968 (R 28 PORTION)

[R 28, p 1]

UNITED STATES DISTRICT COURT

SOUTHERN DISTRICT OF NEW YORK

- x

CAPTION :

:

:

:

- x

The following motions having been made,

1. By the defendant, The Singer Company (hereinafter "Singer") for summary judgment, pursuant to Rule 56 of the Federal Rules of Civil Procedure, dismissing the Complaint of plaintiff, Perma Research & Development Company (hereinafter "Perma"),
2. By Singer for summary judgment on its Counterclaim against Perma, pursuant to Rule 56 of the Federal Rules of Civil Procedure,
3. By Perma for summary judgment on the Second Count of the Complaint, pursuant to Rule 56 of the Federal Rules of Civil Procedure,
4. By Perma for leave to file an amended reply

[R 28]

to Singer's Counterclaim, pursuant to Rule 15 of the Federal Rules of Civil Procedure, and

[R 28, p 2]

The Court having granted Perma's motion for leave to file an amended reply to Singer's counterclaim, and

The Court having considered the pleadings in this action, the affidavits, memoranda and exhibits in support of and in opposition to said motions, and having heard counsel for the respective parties and having had due deliberation, and having rendered its decision on March 28 and filed its opinion on April 1, 1968, and

MOTIONS for reargument having been made,

1. By Singer on April 11, 1968, and
2. By Perma on April 23, 1968, and

The Court having granted both of said motions for reargument and on reargument having adhered to its decision dated March 28 and filed April 1, 1968, by memorandum of the Court filed on July 15, 1968, it is

ORDERED that Singer's motion for summary judgment on the First Count of the Complaint be and the same hereby is granted; and it is further

ORDERED that Singer's motion for summary judgment on the Second Count of the Complaint be and the same hereby

[R 28]

is granted insofar as said Count seeks rescission of the December 21, 1964 agreement between Perma and Singer; and it is further

ORDERED that Singer's motion for summary judgment on the Second Count of the Complaint be and the same hereby is denied insofar as said Count seeks damages for the alleged breach of the December 21, 1964 agreement between Perma and Singer; and it is further

[R 28, p 3]

ORDERED that Perma's motion for summary judgment on the Second Count of the Complaint be and the same hereby is denied; and it is further

ORDERED that Singer's motion for summary judgment on its Counterclaim against Perma be and the same hereby is denied; and it is further

ORDERED that the Court, expressly determining under Rule 54(b) of the Federal Rules of Civil Procedure that there is no just reason for delay, hereby expressly directs that a final judgment be entered: (1) dismissing with prejudice the First Count of the Complaint, and (2) dismissing with prejudice the Second Count of the Complaint insofar as said Count seeks rescission of the December 21,

[R 28]

1964 agreement between Perma and Singer; and said judgment is hereby entered.

Dated: New York, New York
August 11, 1968

/s/ Frederick V.P. Bryan
United States District Judge

JUDGMENT ENTERED:

Dated: New York, New York
August 13, 1968

/s/ John J. Olear, Jr.
Clerk

[R 28]

OPINION DATED APRIL 25, 1969 OF THE
UNITED STATES COURT OF APPEALS
FOR THE SECOND CIRCUIT
[410 F.2d 572 (2d Cir. 1969)]

PERMA RESEARCH AND DEVELOPMENT COMPANY, Appellant,

v.

The SINGER COMPANY, Appellee.

Nos. 407 and 408, Dockets 32716 and 32754.

United States Court of Appeals Second Circuit.

Argued Jan. 22, 1969.

Decided April 25, 1969.

Appeal from orders of the United States District Court for the Southern District of New York, Frederick van Pelt Bryan, J., granting partial summary judgment for defendant in action for breach of contract and dismissing companion action for injunctive relief. The Court of Appeals, J. Joseph Smith, Circuit Judge, held, inter alia, that allegation that contract was procured by fraud and misrepresentation on part of defendant and its agents as to its intentions and ability to market product was by itself plainly insufficient to state a claim for fraud.

Affirmed.

1. Courts ⇐405(12.23)

Partial adjudication of a single claim is not appealable, regardless of whether there is a certificate under rule relating to judgment upon multiple claims or involving multiple parties, since such rule by its very words is applicable only when more than one claim for relief is presented. Fed.Rules Civ.Proc. rule 54(b), 28 U.S.C.A.

2. Federal Civil Procedure ⇐2575

Alternative claims for breach of contract did not present multiple claims within meaning of rule relating to judgment upon multiple claims or involving multiple parties, since plaintiff would be limited at best to a single recovery. Fed. Rules Civ.Proc. rule 54(b), 28 U.S.C.A.

3. Federal Civil Procedure ⇐2575, 2576

The word "claim", in rule relating to judgment upon multiple claims or involving multiple parties, refers to a set of facts giving rise to legal rights in the claimant, not to legal theories of recovery based upon those facts. Fed.Rules Civ. Proc. rule 54(b), 28 U.S.C.A.

See publication Words and Phrases for other judicial constructions and definitions.

4. Contracts ⇐91(6)

Fraud claim should not have been dismissed on ground that it would not support an action for rescission since, under New York law, a contractual promise made with undisclosed intention not to perform it constitutes fraud, and, in addition, if a promise were actually made with a preconceived and undisclosed intention of not performing it such would constitute a misrepresentation of a material existing fact upon which an action for rescission could be predicated under New York law.

5. Fraud ⇐41

Allegation that contract was procured by fraud and misrepresentation on part of defendant and its agents as to its intentions and ability to market product was by itself plainly insufficient to state a claim for fraud. Fed.Rules Civ.Proc. rule 9(b), 28 U.S.C.A.

6. Fraud ⇐12

Actionable fraud depends on more than a showing of nonperformance.

7. Federal Civil Procedure ⇐2537, 2541

Case involving conflict between deposition of officer of plaintiff corporation and affidavit made by him opposing summary judgment, in which officer made no reference to alleged conversation with agent of defendant corporation, was not one where party opposing summary judgment could complain of nonaccess to material facts since officer was a party to the conversation, nor was it one where contradicting affidavit could fairly be said to contain evidence newly discovered since to allow a party who has been examined at length on deposition to raise an issue of fact simply by submitting affidavit contradicting his own prior testimony would greatly diminish utility of summary judgment as a procedure for

screening out sham issues of fact. Fed. Rules Civ.Proc. rule 56(f), 28 U.S.C.A.

8. Federal Civil Procedure ⇐2462

Object of summary judgment is to discover whether one side has no real support for its version of the facts, and thereby to avoid unnecessary trials.

9. Federal Civil Procedure ⇐2538

While there were certain statements made in affidavit of defendant's counsel in support of its motion for summary judgment that did not appear to be made on personal knowledge and which were hence inadmissible, such statements could have been properly disregarded especially where none was relevant to question of whether contract was obtained by fraud. Fed.Rules Civ.Proc. rule 56(e), 28 U.S.C.A.

10. Federal Civil Procedure ⇐2536

Motion to strike was much too general in that it did not specify which part of affidavit of defendant's counsel in support of his motion for summary judgment should be stricken and the reason therefor.

Morris Chertkov, Washington, D. C., (Law Offices of Worth Rowley, Washington, D. C., Eugene J. Metzger, Washington, D. C., Steven F. Yablonski, Silver Spring, Md., on the brief; Maltese, Titone & Anastasi, New York City, of counsel), for appellant.

William C. Chanler, New York City, (Winthrop, Stimson, Putnam & Roberts, New York City, James T. Boorsch, New York City, on the brief), for appellee.

Before SMITH and HAYS, Circuit Judges, and HENDERSON, District Judge.*

J. JOSEPH SMITH, Circuit Judge:

The plaintiff Perma Research & Development Company ("Perma"), brought this action for breach of contract in the United States District Court for the Southern District of New York, alleging that substantial numbers of an automobile anti-skid braking device assembled by the defendant, The Singer Company ("Singer"), were "defective due to inadequate quality control." Judge Bryan granted partial summary judgment in favor of Singer in the action for breach of contract, and dismissed an injunction action brought the same day to enjoin Singer from shipping any of the units thus assembled.[1] For the reasons stated below, we agree with the disposition of these cases, and affirm.

I.

In June, 1964, Perma and Singer entered into a contract (the "June contract") for the manufacture of the "Perma Anti-Skid Device." Invented by Frank A. Perrino, the president of Perma, the product was said to have "a "fail-safe feature which will automatically revert to the standard braking system in case of failure."[2] By the terms of the June contract, the parties agreed that Singer would assemble the product in accordance with specifications and blue-prints provided by Perma, and that Singer would use "diligent quality control in the production, assembly, testing and packaging" of the product.

As a condition precedent to the June contract, Singer purchased an inventory of specified component parts at a cost of $1,000,000.[3] During the first few months of attempted production, Singer complained that a large number of component parts were defective in various ways, and depending on the parts in-

* Chief Judge of the Western District of New York, sitting by designation.

1. The complaints in both actions alleged that Singer had shipped 500 defective units to an Ohio distributor over the express objections of Perma.

2. The quoted words are from the sound track of a promotional film made by Perma sometime prior to the June contract.

3. The component parts were purchased from two companies which had previously manufactured these same parts for Perma.

volved, Perma either arranged for their correction, waived the deviations, or ordered replacements. Singer also suggested modifications in the basic design of the product, and Perma responded by making some twelve design changes.[4]

In December, 1964, the parties entered into a second contract (the "December contract") which terminated the June contract[5] and assigned all patent rights on the product to Singer. In return Singer agreed to manufacture and market the product and pay royalties to Perma.[6] In addition Singer paid $24,000 in cash, gave Perma an interest-free loan of $209,000,[7] and assumed contractual obligations of Perma in the amount of $85,000. Singer also promised to pay $9,800 a month under a six-month technical services contract with Perma.

In August, 1965, Singer concluded that the product could not be made "fail-safe," and commenced a retrieval program to get back those units already on the market. At the same time Singer advised Perma that it was abandoning the project until the "fail-safe" problem could be resolved.

Perma then commenced this action for breach of the June contract. While admitting that the December contract purported to terminate the June contract, Perma alleged that Singer entered into the December contract with an intention not to perform, and asked the court to set aside the December contract on account of fraud. In the alternative, Perma asked for damages for breach of the December contract. Singer, in turn, counterclaimed for $4,000,000 on the theory that Perma had fraudulently misrepresented the "fail-safe" features of the product.

[1-3] On Singer's motion for summary judgment, Judge Bryan dismissed the action to set aside the December contract on account of fraud.[8] He held that Perma failed to produce any evidence showing a fraudulent intent on the part of Singer, and further held that a fraudulent intent, even if proved, would not give rise to an action for rescission under New York law.[9] Having concluded that

4. Under paragraph 9 of the June contract, Singer was forbidden to make any changes in the basic design of the invention without the written approval of at least two officers of Perma.

5. Paragraph 7 of the December contract provided that the June contract "shall be deemed null and void and of no force and effect," and further provided that "all rights and obligations of the parties thereunder" shall be terminated with the exception of certain accrued items not relevant here.

6. In the event Singer did not spend at least $100,000 annually on "marketing, promoting and advertising" the product, the December contract gave Perma a "reversion right" on the payment of $50,000.

7. This was done under an arrangement whereby Singer assumed $209,000 in claims against Perma in return for which Perma gave Singer a promissory note in that amount.

8. Perma also alleged that the December contract was void on account of lack of consideration and illusoriness. In light of the statements made in the Perrino deposition, the mind boggles at the suggestion that the December contract was not supported by adequate consideration. Perrino admitted, for example, that in consideration for the December contract Singer paid $24,000 in cash, assumed an obligation of a distributor for $40,000, and paid certain of Perma's debts or assumed its liabilities to the sum of $209,967. He also admitted that Singer and Perma had continued to work together for at least six months under the technical services contract, and that Perma was paid at the monthly rate of $9,800. Equally frivolous is the argument based on illusoriness, since Singer was obligated to use its best efforts to manufacture and market the product *even if the agreement did not expressly say so.* "A promise may be lacking, and yet the whole writing may be 'instinct with an obligation' imperfectly expressed." Wood v. Lucy, Lady Duff-Gordon, 222 N.Y. 88, 91, 118 N.E. 214 (1917) (Cardozo, J.). Moreover, it appears from the depositions that Singer did in fact spend substantial time and money trying to perfect and market the product.

9. The December contract expressly provided it should be construed in accordance with New York law.

there was no actionable fraud, Judge Bryan dismissed the claim for breach of the June contract on the ground that any such claim was barred by the valid December contract. This left the claim for breach of the December contract, as well as the counterclaim by Singer, and as to these claims Judge Bryan denied summary judgment. He then certified that there was "no just reason for delay," and entered final judgment on the dismissed claims.[10]

On appeal Perma insists that a contractual promise made without any intention of performing it is fraudulent, and that Judge Bryan erred in holding that a contract induced by fraudulent promises could not be rescinded under New York law. In addition, Perma urges that there was a triable issue of fact on the fraud claim, and that summary judgment was improperly granted. We need not reach the summary judgment question, of course, if Judge Bryan was correct in holding that proof of an intention not to perform would not give rise to an action for rescission under New York law.

II.

[4] Since the New York Court of Appeals has specifically held that "a contractual promise made with the undisclosed intention not to perform it constitutes fraud," Sabo v. Delman, 3 N.Y.2d 155, 162, 164 N.Y.S.2d 714, 718, 143 N.E.2d 906, 909 (1957), we think that Judge Bryan erred in dismissing the fraud claim on the theory that it would not support an action for rescission. "[I]f a promise was actually made with a preconceived and undisclosed intention of not performing it, it constitutes a misrepresentation of 'a material existing fact' upon which an action for rescission may be predicated." Id. at 160, 164 N.Y.S.2d at 716, 143 N.E.2d at 908.

In dismissing the fraud claim, Judge Bryan quoted approvingly from Briefstein v. P. J. Rotondo Co., 8 A.D.2d 349, 351, 187 N.Y.S.2d 866, 868 (1st Dept. 1959), where it was said: "To say that a contracting party intends when he

10. Since the injunction action raises the question of whether the December contract was fraudulently induced, and since dismissal of that action is unquestionably a "final decision" within the meaning of 28 U.S.C. § 1291, we need not decide whether the dismissed claims in the breach of contract action are properly appealable under Rule 54(b), Fed.R.Civ.P. The basic issue in both actions is whether the June contract was effectively terminated by the December contract, and under the circumstances, we think that a decision adjudicating the fraud issue in the injunction action would be *res judicata* in the breach of contract action. See generally 1B Moore, Federal Practice ¶ 0.405 [1] (2d ed. 1966).

By its very words Rule 54(b) is applicable only "[w]hen more than one claim for relief is presented," and thus the partial adjudication of a single claim is not appealable, regardless of whether there is a Rule 54(b) certificate. McNellis v. Merchants National Bank & Trust Company of Syracuse, 385 F.2d 916 (2d Cir. 1967). The alternative claims for breach of contract do not present multiple claims within the meaning of Rule 54(b), since Perma would be limited at best to a single recovery. See Campbell v. Westmoreland Farm, Inc., 403 F.2d 939, 941 (2d Cir. 1968). "The word 'claim' in Rule 54(b) refers to a set of facts giving rise to legal rights in the claimant, not to legal theories of recovery based upon those facts." CMAX, Inc. v. Drewry Photocolor Corp., 295 F.2d 695, 697 (9th Cir. 1961). As to whether the claim-counterclaim situation presents multiple claims, compare Omark Industries, Inc. v. Lubanko Tool Co., Inc., 266 F.2d 540 (2d Cir. 1959) ("multiple claims" presented when the plaintiff sued for goods sold and delivered and defendant counterclaimed for breach of franchise agreement), with Seaboard Machinery Corp. of Delaware v. Seaboard Machinery Corp. of New Jersey, 267 F.2d 178 (2d Cir. 1959) ("single claim" presented where all counts of complaint and counterclaim arose out of a single contract). Compare also Bendix Aviation Corp. v. Glass, 195 F.2d 267, 38 A.L.R.2d 356 (3d Cir. 1952) (*en banc*) ("multiple claims" presented where claims for specific performance and counterclaim for damages arose out of same transaction), with Carter v. Croswell, 323 F.2d 696 (5th Cir. 1963) ("single claim" presented where claim and counterclaim arose out of same automobile accident).

enters into an agreement not to be bound by it is not to state 'fraud' in an actionable area, but to state a willingness to risk paying damages for breach of contract." Judge Bryan distinguished *Sabo* on the ground that the fraud there resulted from misrepresentations as to "collateral matters" which had not been reduced to writing. Since Singer did not make any promises "outside the terms of the contract," Judge Bryan concluded that *Briefstein*, and not *Sabo*, was controlling. We disagree.

While the contract in *Sabo* may have been fraudulently induced by "collateral" promises not reduced to writing, there is nothing in the *Sabo* opinion which suggests that the result would have been any different if the fraudulent promises had been included within the actual terms of the contract itself. As a matter of plain logic, we fail to see why there is any less fraud in the inducement if the false promises are made a part of the contract itself, and indeed, *Sabo* speaks of *contractual* rather than *collateral* promises. Since *Briefstein* was not decided by the highest appellate court in New York, and since there is good reason to think that the New York Court of Appeals would not follow the somewhat aberrational holding of that case,[11] we think that *Sabo* is controlling in this diversity action, see Commissioner of Internal Revenue v. Bosch's Estate, 387 U.S. 456, 87 S.Ct. 1776, 18 L.Ed.2d 886 (1967), and hold that Judge Bryan erred in dismissing the fraud claim on the basis of *Briefstein*.

11. The *Briefstein* rationale is not supported, for example, by either the Restatement of Contracts or the Restatement of Torts. See Restatement, Contracts § 473: "A contractual promise made with the undisclosed intention of not performing it is fraud." See also Restatement, Torts § 530, comment c, which provides in pertinent part: "One who fraudulently misrepresents himself as intending to perform an agreement which he makes with the recipient of the misrepresentation, is subject to liability • • • whether the agreement is enforceable or unenforceable as a contract."

III.

Having concluded that the fraud alleged here, if true, would support an action for rescission, we must decide whether Judge Bryan was correct in holding that there were no triable issues of fact on the fraud claim. We agree that the fraud claim is without any substance, and affirm on this ground.

[5, 6] The only allegation of fraud in the entire Perma complaint is the statement that the December contract "was procured by fraud and misrepresentations on the part of [Singer] and its agents as to its intentions and ability to market said product." By itself this allegation is plainly insufficient to state a claim for fraud under Rule 9(b), Fed. R.Civ.P.[12] Nor does the deposition of Perrino, the president of Perma, provide any factual basis for the fraud alleged in the complaint. Except for repeated references to Singer's unsatisfactory performance under the December contract, Perrino was unable to point to any evidence of an intention not to perform, and as Judge Bryan properly observed, actionable fraud depends on more than a showing of non-performance. See Restatement, Torts § 530, comment c; Restatement, Contracts § 470, comment e; Adams v. Clark, 239 N.Y. 403, 410, 146 N.E. 642 (1925). Moreover, it appears from the deposition that there was substantial performance under the December contract, at least until Singer concluded that the product was not "fail-safe" and hence unmarketable. Indeed, Perrino admitted in his deposition that the parties

12. Rule 9(b) provides that the circumstances constituting the alleged fraud must be stated with particularity. Failure to comply with Rule 9(b) will render the pleadings vulnerable to a motion to dismiss for failure to state a claim, see, for example, Robison v. Caster, 356 F.2d 924 (7th Cir. 1966), or a motion for a more definite statement. See, for example, Trussell v. United Underwriters, Ltd., 228 F.Supp. 757, 774 (D.Col.1964); Lynn v. Valentine, 19 F.R.D. 250 (S.D. N.Y.1956).

were engaged in joint efforts to solve the "fail-safe" problem as late as six months after the December contract was negotiated.

The only difficult question is whether any of the statements made by Perrino in an affidavit opposing summary judgment are sufficient to raise material issues of fact. In that affidavit Perrino said:

> At the time I entered into the contract of December 21, 1964 on behalf of Perma with Singer, Perma was in desperate financial straits because of the delays in deliveries of the product under the June contract. *Mr. Kloby of Singer told me that Singer was waiting for Perma to become insolvent so that they could take over the rights to manufacture and market the product under the most satisfactory conditions or get out of their obligations to Perma entirely.* Mr. Peacock, of counsel for Singer, told me, at the time of the negotiations for the December contract, in the presence of Mr. Kloby, that Singer had every intention to manufacture and market the product and pay royalties to Perma. The Singer name was of great importance to Perma, *but I have since learned that the same Mr. Peacock had already drawn a draft agreement to sell the marketing rights to Monitor Enterprises of Long Island, New York, under an agreement whereby Perma would receive no royalties.* Also, subsequent to the signing of the December contract *I had a conversation with Mr. Person of Singer at the Biltmore Hotel in Providence, Rhode Island, at which time Mr. Person told me that Singer never had any intention of performing the December contract,* that Singer's New York management was now afraid of product liability and Singer did not want to be in the brake business, and would allow the contract to expire on the reversion date. [Italics added.]

Since Perma has fully performed all of its obligations under the December contract, Singer would be obligated to make royalty payments even if Perma became insolvent, and thus we fail to see how the statement attributed to Kloby raises any triable issue of fraud. We also note that Kloby was deposed for over 300 pages by plaintiff's counsel and was never asked about the statement which Perrino now attributes to him.

Similarly, there is no substance to the suggestion that Perma would be cheated out of royalties due under the December contract if Singer sold its marketing rights to Monitor Enterprises, Inc. The December contract expressly provides that Singer shall have "absolute discretion" in determining "the method of manufacturing, exploiting and marketing the product," and thus it would seem that Singer is obligated to pay royalties regardless of how it markets the product. Assuming that Singer did in fact arrange to sell the marketing rights to Monitor, we simply cannot say that raises any triable issue of fraud.

Finally, Perrino states that he was told by Person of Singer that "Singer never had any intention of performing the December contract." This statement is alleged to have been made sometime after the parties entered into the December contract. While it would appear to raise a triable issue as to fraudulent intent, we think that Judge Bryan could properly conclude that the statement made in the affidavit was less reliable than the contradictory statements in the deposition, see 6 Moore, Federal Practice ¶ 56.22[1] at 2814 (2d ed. 1965), and that it did not raise a triable issue of fraud.

At the time of his deposition Perrino was able to point only to Singer's alleged failure to perform as evidence of its supposed intention not to perform. At one point in the deposition he said: "There is no way of me knowing exactly what their intention was at the time they said it, except that they promised certain things when everything else points to the fact that they did not intend to do what they said they were going to do." Moreover, Perrino admitted in his deposition that there had been substantial performance under the December contract, and

this is not contradicted by the affidavit. If there is any dispute as to the material facts, it is only because of inconsistent statements made by Perrino the deponent and Perrino the affiant. "The deposition of a witness will usually be more reliable than his affidavit, since the deponent was either cross-examined by opposing counsel, or at least available to opposing counsel for cross-examination. Nevertheless, if a witness has made an affidavit and his deposition has also been taken, and the two in some way conflict, the court may not exclude the affidavit from consideration in the determination of the question whether there is any genuine issue as to any material fact." 6 Moore, Federal Practice ¶ 56.22[1] at 2814 (2d ed. 1965).

[7] During four days of deposition-taking Perrino was repeatedly asked to specify the basis of the fraud he alleged, and we think it is significant that he made no reference to the alleged conversation with Person when Singer might have had an opportunity to cross-examine him about it. We think it is also significant that Perma's lawyers failed to question Person about the alleged conversation when they examined him on deposition. Since Perrino was admittedly a party to that conversation, this is plainly not a case where the party opposing summary judgment can complain of non-access to material facts. See Rule 56(f), Fed.R.Civ.P. Nor is this a case where the contradicting affidavit can fairly be said to contain evidence "newly discovered." If a party who has been examined at length on deposition could raise an issue of fact simply by submitting an affidavit contradicting his own prior testimony, this would greatly diminish the utility of summary judgment as a procedure for screening out sham issues of fact. Cf. Dressler v. MV Sandpiper, 331 F.2d 130 (2d Cir. 1964). Compare Engl v. Aetna Life Insurance Co., 139 F.2d 469 (2d Cir. 1943), where Judge Clark observed that a party who resists summary judgment cannot hold back his evidence until the time of trial.

[8] The object of summary judgment is "to discover whether one side has no real support for its version of the facts," Community of Roquefort v. William Faehndrich, Inc., 303 F.2d 494, 498 (2d Cir. 1962), and thereby to avoid unnecessary trials. We recognize that summary judgment was never intended to be a substitute for trial by jury where the parties "really have issues to try." Sartor v. Arkansas Natural Gas Corp., 321 U.S. 620, 621, 627, 64 S.Ct. 724, 88 L.Ed. 967 (1944). We recognize also that there may be some instances where summary judgment is too blunt a procedural device for deciding difficult cases. See, for example, Miller v. General Outdoor Advertising Co., 337 F.2d 944 (2d Cir. 1964). Nonetheless, summary judgment cannot be defeated by the vague hope that something may turn up at trial. Radio City Music Hall Corp. v. United States, 135 F.2d 715 (2d Cir. 1943). Since neither the Perrino deposition nor the Perrino affidavit raises any issue which we can call genuine, and since the allegations of fraud amount to little more than allegations on non-performance, we hold that Judge Bryan properly granted summary judgment dismissing the fraud claims.

IV.

As a separate ground for reversal Perma urges that Judge Bryan erred in admitting the affidavit of Singer's counsel in support of its motion for summary judgment. The affidavit was made by William C. Chanler, and it was basically an attempt to summarize over 1,000 pages of depositions, as well as numerous documentary exhibits. Perma now insists that the affidavit contains "a substantial number of important misstatements and misconstructions," that it was based on hearsay as to which Chanler was not competent to testify, and that it was not made on personal knowledge as required under Rule 56(e), Fed.R.Civ.P.

[9] While it is true that there are certain statements which do not appear to be made on personal knowledge and which are hence inadmissible,[13] see Union

13. At one point, for example, Chanler stated in his affidavit that there was O-ring leakage in a pressure switch component and that this resulted from "a

Insurance Society of Canton, Ltd. v. William Gluckin & Co., 353 F.2d 946, 952 (2d Cir. 1965), we think that Judge Bryan could have properly disregarded these statements, especially since none is relevant to the question of whether the December contract was obtained by fraud. "Even if an affidavit does contain some inadmissible matter, the whole affidavit need not be stricken or disregarded; the court may disregard the inadmissible parts and consider the rest of the affidavit." 6 Moore, Federal Practice ¶ 56.22 [1] at 2817 (2d ed. 1965).

[10] We also note that the motion to strike was much too general in that it did not specify which parts of the Chanler affidavit should be stricken and why. Many of the statements made in the Chanler affidavit were amply supported by the record, and we think that the plaintiff was required to do more than swing its bludgeon wildly. As Prof. Moore has said, the motion to strike must be precise. "[I]t should state specifically the portions of the affidavit to which objection is being made, and the grounds therefor." 6 Moore, Federal Practice ¶ 56.22[1] at 2818 (2d ed. 1965).

The judgments are affirmed.

ORDER DATED APRIL 25, 1969, OF THE UNITED STATES COURT OF APPEALS FOR THE SECOND CIRCUIT (R 42)

United States Court of Appeals

FOR THE

SECOND CIRCUIT

At a Stated Term of the United States Court of Appeals, in and for the Second Circuit, held at the United States Courthouse in the City of New York, on the twenty-fifth day of April one thousand nine hundred and sixty-nine.

Present:

HON. J. JOSEPH SMITH,

HON. PAUL R. HAYS,
Circuit Judges.

HON. JOHN O. HENDERSON,
District Judge.

file
66C.665
66C.666

Circuit Judges.

Perma Research and Development Company,
Plaintiff-Appellant,

v.

The Singer Company,
Defendant-Appellee.

U. S. DISTRICT COURT
FILED
JUN 20 1969
S. D. OF N. Y.

Appeal from the United States District Court for the Southern District of New York.

This cause came on to be heard on the transcript of record from the United States District Court for the Southern District of New York, and was argued by counsel.

ON CONSIDERATION WHEREOF, it is now hereby ordered, adjudged, and decreed that the orders of said District Court be and ~~it hereby is~~ they hereby are affirmed with costs to be taxed against the appellant.

A. DANIEL FUSARO
Clerk.

[R 42]

JUDGMENT ENTERED 6/24

A true copy.
A. Daniel Fusaro
Clerk

John Lumpkin
CLERK

No Bill or Statement attached

#408

UNITED STATES COURT OF APPEALS
SECOND CIRCUIT
FILED
APR 25 1969
A. DANIEL FUSARO CLERK

Clerk.

A true copy. JUDGMENT ENTERED

Clerk

[R 42]

DEFENDANT'S RULE 9(g) STATEMENT, FILED SEPTEMBER 5, 1969 (R 45)

[R 45, p 1]

UNITED STATES DISTRICT COURT

SOUTHERN DISTRICT OF NEW YORK

- x

:

SAME CAPTION :

:

:

- x

This statement is submitted to the Court in compliance with Local Rule 9(g).

This is an action brought by the plaintiff Perma Research & Development Company ("Perma") against defendant The Singer Company ("Singer"). In the present posture of the litigation, the only cause of action outstanding is a claim for $41,000,000 damages for alleged breach of a contract between Perma and Singer entered into on December 21, 1964. The present motion seeks summary judgment dismissing this cause of action on the ground that, on the basis of the following undisputed facts, the case is moot:

(1) Plaintiff's President, Perrino, is the inventor of a device known as the "Perma Anti-Skid Device" designed to prevent an automobile from skidding.

(2) Under the December contract, Perma's patents for this invention were assigned to Singer and Singer undertook to manufacture, promote and distribute the product.

(3) The contract provided that Singer should have absolute discretion to determine the method of manufacturing,

[R 45, p 2]

exploiting and marketing the product.

(4) The contract also provided that Perma could recover its patents upon the payment of certain specified sums if, during any calendar year commencing January 1, 1966, Singer should incur less than $100,000 in costs for promoting and advertising the product.

(5) After entering into the December contract, Singer conducted extensive field tests and studies of past performance of the device as a result of which Singer concluded that its design was inherently defective and rendered the same dangerous to life and limb in that a malfunction of the device might result in a total loss of all braking power, and that therefore it was not "fail-safe".

(6) On August 30, 1965, Perma and Singer agreed that all units which had theretofore been sold either to distributors or to the public should be retrieved.

(7) As of today, any malfunction of the device might still result in a total loss of braking power and,

therefore, in a fatal accident.

(8) In November 1965, Singer informed Perma that because of its conclusion that the device was defective it would proceed no further thereunder, but offered to accelerate the reversion clause of the contract hereinabove referred to so as to permit Perma to recover its patents at once and without the necessity of paying the sums required to be paid to Singer thereunder until and unless Perma earned the sums

[R 45, p 3]

from further exploitation of the product.

(9) Perma rejected this offer and instead brought the present lawsuit.

(10) Since the commencement of this lawsuit, Singer has repeatedly offered to return Perma's patents to it without requiring the payment of the sums specified in the contract in settlement of the lawsuit, but Perma has repeatedly rejected these offers.

Respectfully submitted,

WINTHROP, STIMSON, PUTNAM & ROBERTS

By /s/ William C. Chanler
William C. Chanler
A Member of the Firm

PLAINTIFF'S RULE 9(g) STATEMENT FILED JANUARY 5, 1970 (R 51)

[R 51, p 1]

UNITED STATES DISTRICT COURT
SOUTHERN DISTRICT OF NEW YORK

- -x

SAME CAPTION

- x

This statement is submitted to the Court in compliance with Local Rule 9(g).

In its present posture, this is an action by Perma Research & Development Co. ("Perma") against The Singer Company ("Singer") for $41,000,000 in damages for breach of a contract between Perma and Singer entered into on December 21, 1964. Defendant has moved for Summary Judgment dismissing the complaint.

Plaintiff submits that the motion should be denied on the ground that there are substantial factual issues to be tried. Plaintiff specifically controverts the following paragraphs of Defendant's 9(g) statement, there set forth as "undisputed facts": 2, 3, 5, 7, 8, 9 and 10. In addition plaintiff submits that the following material facts are true and that the defendant has disputed or is disputing these same facts:

(1) The Perma Anti-Skid device ("product") effecti-

[R 51, p 2]

vely and dramatically advances automative safety. Upon application of automotive brakes, the product mechanically pumps the brakes several times per second, faster and with more control than man can pump them, allowing a car to stop without skidding on any road surface, wet or dry, in distances shorter than, or at least as short as, are attainable on vehicles not equipped with the product.

(2) By June of 1964, the anti-skid product had achieved public acceptance and the beginnings of commercial success.

(a) The product had been extensively tested with favorable results both by Perma and by others;

(b) The product received national publicity;

(c) As a result of Perma's contracts with various manufacturers, commercial manufacture of the product had begun;

(d) Perma had successfully marketed some 3,500 anti-skid units;

(e) Perma had additional unfilled firm orders from some of its distributors for the delivery of over 40,000 units within the next year.

(3) By the time Perma and Singer entered into the December 21, 1964 contract, the parties reasonably expected substantial profits from the contract.

(a) Perma had contracts with distributors covering firm orders or minimum requirements to maintain franchise rights for in excess of 225,000 units of product;

[R 51, P 3]

(b) Perma had developed a distributor network in parts of the United States and Canada, and was in the process of negotiating distribution rights in foreign nations;

(c) Philips Petroleum Co. was planning to distribute the product through its retail outlets; its market surveys estimated sales through its dealers at over 19,000 units a month, or in excess of 228,000 per year.

(4) Singer entered into the December contract with full knowledge of the product's mechanical and operational aspects.

(a) Singer became involved in the manufacture of this product as a result of its own solicitation;

(b) Singer entered into the contract only after Singer had extensively tested the product;

(c) Singer was given the plans and specifications of the product prior to entering into the contract.

(5) Perma's intentions in entering into a contractual relationship with Singer in June 1964 were to pro-

vide itself with a manufacturer

(a) which could and would handle the greatly expanded production requirements anticipated for the product, and

(b) which could and would provide quality manufacturing with careful quality control and testing of the product in order to prevent defective manufacture.

(6) Between June and December 1964, Singer commenced production of the anti-skid unit, but due to inadequate control, testing and supervision of the manufacture and assembly

[R 51, p 4]

processes - despite repeated warnings from Perma, Singer's total production was approximately 50,000 units, virtually all of which were unmarketable. As a result, Perma was deprived of all sales income and reduced to desperate financial straits. The production by Singer of these unmarketable units was not attributable to design defect or other fault of Perma.

(7) Against this background, with Perma reduced to near insolvency by Singer's failure to perform between June and December 1964, the parties entered the December contract which Singer breached by its failure to manufacture and ship any units and by its notification to Perma in October 1965 that it would not perform the contract.

(8) During the contract performance period, there were no design defects in the product. Moreover, Singer's tests in the spring and summer of 1965 confirmed the product's marketability. Contrary to the assertions of paragraph 5 of defendant's 9(g) statement, the results indicated that the product was effective in that the stopping distances for cars equipped with the device were consistently shorter than or equal to those achieved on a car not equipped with the anti-skid device. The tests did not, and could not, indicate that the product was not fail-safe or was inherently defective or in any other way not suitable for commercial use.

(9) Contrary to paragraphs 5, 6 and 7 of Defendant's 9(g) statement, the product was, in fact, fail-safe.

(a) When Perma initially contracted with Singer, the anti-skid device had fail-safe mechanisms in both the sensing unit and the vacuum can;

(b) In the spring of 1965 an additional fail-safe

[R 51, p 4a]

mechanism was installed as part of the transfer valve;

(c) When Singer tried in October, 1965 to avoid its contract, Perma designed yet another back-up fail-safe mechanism which Singer refused to test.

[R 51, p 5]

(d) Any malfunction of the device will not result

in a total loss of brakes.

(10) Perma agreed upon the retrieval program referred to in paragraph 6 of defendant's 9(g) statement solely because of inadequate manufacturing and assembly not because there were any design defects in the unit.

(11) In respect to paragraph 4 of defendant's 9(g) statement, while the December contract contains a clause which allowed Perma to elect to repurchase its patents (at a substantial cost) if Singer failed to incur at least $100,000 in promotional and advertising costs in the year 1966, this provision and Perma's refusal to accept Singer's "offer" referred to in paragraph 8 of Defendant's 9(g) statement are irrelevant.

(a) The parties never intended that this clause would serve as a defense to Singer for its failure to perform its contract;

(b) Singer's breach occurred in 1965, not 1966 or 1967;

(c) Perma chose not to use its right to repurchase for the reason that the clause is not, in fact, a remedy at all for the breach of contract alleged; nor was it so intended by the parties.

(d) Without regard to lost profits and other damages, to restore Perma to the position it occupied prior to the December contract would have involved a payment by

[R 51]

Singer to Perma of over $2,000,000 for rehiring its production, testing, sales, marketing and distributor personnel, in addition to

[R 51, p 6]

the return of the patents.

(12) Singer's breach of the contract has caused substantial damage to plaintiff.

(a) The present market value of the patent has been sharply reduced in that Singer's unexcused breach has nearly destroyed the patent's reassignment value;

(b) Perma at present no longer has the good will, reputation and initial competitive momentum that it had prior to the breach;

(c) Perma has not received the substantial profits on firm orders totalling approximately 40,000 units;

(d) Perma has not received the substantial profits on requirements contracts to maintain franchises, totalling some 200,000 units;

(e) Perma has not received the anticipated profits based on distributor interest, expanding markets, market surveys, and plans to distribute another 228,000 units;

(f) Perma at present has nearly been destroyed as a viable business by Singer's breach. Before the contract was entered into, Perma was a flourishing business

of 400 stockholders who had invested $730,000 in cash and at least $3,000,000 worth of services and materials for their shares.

Respectfully submitted,

POLETTI FREIDIN PRASHKER FELDMAN
& GARTNER

By: /s/ Paul R. Grand
Paul R. Grand
A Member of the Firm

PAGES 1 AND 11 THROUGH 15 OF DEFENDANT'S REPLY MEMORANDUM IN SUPPORT OF MOTION FOR SUMMARY JUDGMENT FILED JANUARY 6, 1970 (R 55 PORTION)

[R 55, p 1]

UNITED STATES DISTRICT COURT

SOUTHERN DISTRICT OF NEW YORK

- x

:

:

SAME CAPTION

:

:

- x

Plaintiff's President, Perrino, asserts in his affidavit that "Whether the device was 'fail-safe' when Singer decided not to market it is the core of the present dispute between Perma and Singer." (Perrino Aff., ¶13)

While, as we shall show later, plaintiff's only remedy for non-performance would be the reacquisition of its patents even if the device is fail-safe, we submit that the short answer to plaintiff's attempt to oppose this motion for summary judgment is that the Court now has before it an admission by Perrino in his affidavit submitted in opposition that the Perma device is not fail-safe, at least

* * * * * *

[R 55]

and ship" the product unless it also marketed, promoted and advertised it? And vice versa, how could Singer market, promote and advertise the product unless it had manufactured it? We submit that it is perfectly plain from the contract as construed by Judge Bryan under the Duff-Gordon rule that Singer's obligation was to use its best efforts, within its absolute discretion, to manufacture, market and promote the product, and that Perma's reversion right arose if it failed to spend $100,000 a year on marketing and promoting, after January 1, 1966.*

It is obvious from a consideration of the circumstances under which the contract was entered into in December

---

* Actually, upon reconsideration in the light of plaintiff's present contentions, it becomes evident that the December contract was not really a "Duff-Gordon" contract at all. The reason that case was relied on on the prior motion was that it squarely met plaintiff's contention that Singer was not bound to perform any covenants or agreements at all. Actually, in the light of the present status of the litigation, the answer to plaintiff's former contention might just as well have been that what the contract provided was that Singer had absolute discretion as to manufacturing and promoting the product, except that if Singer failed to spend $100,000 a year on marketing and promoting after the first year under the contract, Perma could obtain the reassignment of its patents. We submit that if the contract involved in the Duff-Gordon case had contained a similar reversion right, that would have been sufficient to dispose of the "illusory" contention raised in that case.

1964, as well as from the provisions of the technical services' contract entered into simultaneously therewith between Perma and Singer, that it was never contemplated that Singer could

[R 55, p 12]

or should begin to manufacture and market the product as soon as the contract was entered into. As Perrino repeatedly asserts at pages 5 to 7 of his affidavit in opposition to the present motion, during the course of 1964 it was discovered, and agreed between Perma and Singer, that the 50,000 units assembled by Singer from the component parts which Singer had purchased from Perma's prior suppliers at a cost to it of $1,000,000, were "unmarketable" (Perrino Aff., pp. 5 and 6).

Of course, Perrino argues at length that the units were defective because of Singer's "inadequate quality control" - and now, Perma's memorandum repeatedly asserts that this was due to Singer's "wrongdoing." Actually, we think that it is clear from the record that it was because of Singer's excellent quality control that the defects in these 50,000 units were discovered. But that dispute is no longer of concern to the Court. It was the subject matter of the first count in the complaint for damages for breach of the June contract which has been stricken by Judge Bryan's decision, so that it is no longer an issue on this motion. But

so far as plaintiff's present argument is concerned, it is plain that whoever was at fault, as of December 21, 1964 when the contract here in issue was entered into, no marketable units which could be shipped and no viable component parts from which new units could have been manufactured were in existence. Obviously, the contract could not be construed as requiring Singer to manufacture and

[R 55, p 13]

ship units which were known to be unmarketable at the time the contract was entered into.

That the contract was not intended to require Singer to manufacture and ship during 1965 is further apparent from the technical services' agreement annexed as Exhibit 3 to the December contract which provided that during the first six months under the December contract Perma should "render technical assistance to Singer * * * in the preparation and designing of drawings, blueprints, design sheets, bills of material, specifications and the like from which the Product and its various components can be manufactured" (¶ 1(b)), that "Perma shall train selected employees of Singer at the plant and the facilities of Perma with respect to all phases of manufacture, installation, marketing and use of the Product" (¶ 3) and that "Perma shall install the Product in

test cars provided by Singer or Perma and shall perform tests thereon at the testing facilities of Perma as reasonably requested by Singer and shall report to Singer concerning the results of such tests" (¶ 4).

Obviously, it was contemplated that considerable time would be spent after the contract was entered into in attempting to perfect the device and in training Singer personnel in its manufacture, etc. That, of course, is often customary in contracts for the licensing of patents* and

[R 55, p 14]

that is why paragraph 10 is based on the assumption that Singer would not be in a position to manufacture, market and exploit the product until 1966. Its duties, at least during the first part of 1965, were clearly confined to testing, removing and curing defects known to exist in the 50,000 units already assembled, and attempting to produce a marketable

---

* See, e.g., Ross v. Imbrey, 37 N.Y.S. 2d 793, where an exclusive license of patented musical instruments entered into in 1939 gave licensor a recapture right if prescribed minimum annual royalties were not paid during the year 1941 and succeeding years.

product in cooperation with Perma.*

Plaintiff also refers to the fact that under the December contract, Singer took over five distributorship contracts previously entered into by Perma with various distributors in the country. It is true that these contracts contained orders by the distributors for specified numbers of units to be delivered either in 1964 or 1965. As we shall show in the next point, it is also apparent from the exhibit attached to Perrino's affidavit, as well as from opinions of the courts

[R 55, p 15]

on the prior motion, that at least until the end of July 1965, Singer was using its best efforts to fill these orders.

---

* We are at a loss to understand the purpose of plaintiff's reliance on Bernard v Golden Gate Manufacturing Company, as indicating that it is entitled to sue for damages. As appears from the opinion in the case, quoted at page 23 of plaintiff's memorandum. the contract contained an "unconditional agreement by which the defendant was to manufacture and sell the specified number [27,000] of bottles during the said year." The action was "for damages for defendant's failure to manufacture and sell as agreed, the damages being measured by the royalties the plaintiff would have been entitled to receive had the defendant performed the contract." (187 App. Div. p. 547) As is clear from page 12 of our principal memorandum, we concede that if the contract here in issue had required Singer to manufacture and ship a specified number of units during the year 1965, and of course pay royalties thereon, (and if the device was failsafe and marketable), Perma would have had a cause of action for damages measured by the failure

However, it is obvious that when the contract was entered into, Singer could not have been and was not expected to ship units which were concededly defective and unmarketable to these distributors.

Thus, there is no basis for Perma's present contention that Singer violated a separate affirmative duty to manufacture and ship the device during 1965.

---

to pay the said royalties, in addition to its right to recover its patents if Singer had not complied with that provision. The whole point is that the contract here in issue contains no such provision.

PLAINTIFF'S MEMORANDUM IN RESPONSE TO DEFENDANT'S REPLY MEMORANDUM DATED JANUARY 6, 1970 (PAGE 6, LINE 4 - PAGE 8, LINE 5; PAGE 13, LINE 19 - PAGE 14, LINE 9) (R 56 PORTION)

* * * *

[R 56, p 6]

III. The contract provided for at least a minimum period of performance for the year 1965.

Plaintiff does not claim that in 1965 defendant had a "separate" obligation -- rather, defendant was under continuing obligation stretching over a period of many years. But, if this Court should find that the reversion clause does allow Singer a way out of the contract, then the incontestable language of the contract indicates that it refers to facts that could not occur before 1966.

Defendant seems to concede that the contract calls for one year of performance, but argues that the first year was contemplated by the parties as a year of "experimentation". It was never so contemplated by Perma and in fact this is the first time that Singer has advanced this argument. Since at the time of the December contract Perma had contracts with distributors expressly adopted by Singer calling for the delivery of thousands of

[R 56]

units (see Defendant's Reply Memorandum, pages 14 and 15), the parties obviously contemplated immediate manufacture and

[R 56, p 7]

delivery of at least the amount necessary to satisfy the outstanding orders. Singer was expected properly to manufacture and ship such units without regard to any prior defective units (see Perrino Affidavit, page 4, par. 6). Singer appears to recognize that it had an obligation to fulfill these contracts in that it argues on page 15 of its Memorandum that for the first half of 1965 it used its best efforts to do so.

In an attempt to avoid the obvious duty to ship these units, Singer argues that the only 50,000 units available were unmarketable and that it certainly had no duty to ship such units. Singer ignores the fact that the condition of those units resulted from Singer's own misconduct. Moreover, Singer's undertaking was to fulfill Perma's distributor contracts by delivering units -- not any specific units. Thus, the condition of the specific group of units to which Singer alludes is irrelevant.

The technical service contract referred

to in Defendant's Memorandum at page 13, was entered into so that the technical expertise of Perma would be available to Singer for improving its manufacturing methods. To improve the manufacturing methods over the course of only six months' time is not inconsistent with manufacture -- and, indeed,

[R 56,p 8]

pre-

supposes that manufacture is ongoing.

As plaintiff has said repeatedly, the product at all times was ready for mass production and was marketable; the only perfection required was in Singer's manufacturing.

* * *

[R 56, p 13]

VII. Singer breached the contract by failing to manufacture the product.

Singer argues that it performed the contract in that "it attempted to perfect the device and produce a

[R 56, p 14]

marketable product." Since the device was already perfected and marketable, Singer's conduct did not constitute performance. Singer's

[R 56]

obligation after December 1964 was to begin large scale mass production of the unit as soon as possible. The only perfection required was the elimination of the defects in Singer's manufacturing techniques which were delaying the start of mass production. Thus, it is Singer's failure to manufacture that is the heart of this litigation.

* * *

[R 56]

OPINION AND ORDER OF MacMAHON, J., DATED JANUARY 27, 1970 (308 F. Supp. 743 (S.D.N.Y. 1970)(R 61)

PERMA RESEARCH & DEVELOPMENT COMPANY, Plaintiff,

v.

The SINGER COMPANY, Defendant.

No. 66 Civ. 665.

United States District Court, S. D. New York.

Jan. 27, 1970.

Action for damages for breach of contract for manufacture of automobile anti-skid braking device invented by plaintiff's president. On defendant's motion for summary judgment, the District Court, MacMahon, J., held that under contract between manufacturer and owner of rights to automobile anti-skid braking device providing that if manufacturer did not incur costs in specified amount for marketing, promoting and advertising product in any year between January 1, 1966 and December 31, preceding time of expiration of duty to pay royalties, owner would have option to recover patents and terminate the contract, manufacturer could not sit idly until 1966 nor was it required to start

this has the appearance of grasping for straws, it does not, under the circumstances, militate against petitioner's rights to a reopening to determine if he is entitled to a C. O. classification.

manufacturing or shipping at once; rather manufacturer was obligated to use its best efforts to manufacture and market product.

Motion denied.

1. Courts ⇐99(1)

Doctrine of law of the case is addressed to court's good sense and ought not to be imposed on a mechanical basis.

2. Courts ⇐99(1)

One consideration in application of law of the case doctrine is the unseemliness of court's altering legal ruling as to the same litigants.

3. Federal Civil Procedure ⇐2559

Where trial judge who had overruled previous motion for summary judgment adhered to decision on reargument at which defendant cited same authorities and presented identical facts urged on second attempt for summary judgment, prior ruling was law of the case and in absence of any convincing reason for refusal to follow previous ruling it would not be overruled.

4. Contracts ⇐217

An option to terminate contract is not an exclusive remedy, and party is not obligated to exercise such option but may stand on his rights.

5. Patents ⇐216

Contract provision giving owner of patents right to recover its patents and terminate contract if manufacturer failed to perform obligations with respect to marketing, promoting and advertising product did not define sole measure of performance required of manufacturer nor did it specify patent owner's exclusive remedy for breach.

6. Contracts ⇐217

Clause in contract giving manufacturer absolute discretion to determine method of manufacturing, exploiting and marketing of owner's product did not give manufacturer absolute right unilaterally to abandon contract or to terminate it at will.

7. Patents ⇐216

Where owner of rights to automobile anti-skid braking device represented to manufacturer that device had a "fail-safe" feature but it appeared that malfunction of device would lead to complete loss of braking power, device was not "fail-safe" and manufacturer did not breach contract by not shipping product to distributors before it was perfected.

See publication Words and Phrases for other judicial constructions and definitions.

8. Federal Civil Procedure ⇐2539, 2541

Contradictory or inconsistent statements made by plaintiff's witness in deposition and affidavit in support of motion for summary judgment could not create material issues of fact.

9. Patents ⇐216

Under contract between manufacturer and owner of rights to automobile anti-skid braking device providing that if manufacturer did not incur costs in specified amount for marketing, promoting and advertising product in any year between January 1, 1966 and December 31, preceding time of expiration of duty to pay royalties owner would have option to recover patents and terminate the contract, manufacturer could not sit idly until 1966 nor was it required to start manufacturing or shipping at once; rather manufacturer was obligated to use its best efforts to manufacture and market product.

10. Patents ⇐216

Questions of fact existed as to whether manufacturer used its best efforts for a reasonable length of time in collaboration with owner of rights to automobile anti-skid braking device to perfect product in order to be in a position to market it.

11. Federal Civil Procedure ⇐2161

A motion for summary judgment is addressed to the discretion of the court.

Poletti, Freidin, Prashker, Feldman & Gartner, New York City, for plaintiff;

Paul R. Grand, New York City, of counsel.

Winthrop, Stimson, Putnam & Roberts, New York City, for defendant; William C. Chanler and James T. Boorsch, New York City, of counsel.

OPINION

MacMAHON, District Judge.

This is a motion by defendant, The Singer Company ("Singer"), for summary judgment dismissing the complaint, pursuant to Rule 56, Fed.R.Civ.P. Plaintiff, Perma Research & Development Company ("Perma"), contends that the motion should be denied both because of the doctrine of "law of the case" and because there are many issues of material fact in dispute.

The complaint, far from a model of clarity, asserts three claims. The first seeks damages of $41,000,000 for breach of a June 1964 contract between the parties, alleging that substantial numbers of an automobile anti-skid braking device invented by Frank A. Perrino, the president of Perma, and assembled by Singer under the contract were "defective as a result of inadequate quality control." The second seeks to set aside a superseding contract made in December 1964 and to recover damages of $41,000,000 for fraud in the inducement. Both of these counts were dismissed by this court (Bryan, J.) and summary judgment granted in favor of Singer. The Court of Appeals affirmed. 410 F. 2d 572 (2d Cir.1969).

We are concerned here with the third claim, which is buried in the "WHEREFORE" clause of the complaint under the prayer for other relief. It alleges in the alternative that "if it be determined that the contract of December 21, 1964 be valid, Plaintiff demands judgment upon this contract for breach and nonperformance thereunder in the amount of 41 million dollars."

There was extensive discovery, but neither party sought evidence concerning this alternative claim. Rather, it was either overlooked or intentionally ignored. Not surprisingly, therefore, on the earlier motion for summary judgment, Singer did not address itself directly to the alternative claim, nor did Perma. Despite this, it did not escape the notice of Judge Bryan, who, after noting the neglect of the parties, held that "in the present posture of this action and on the papers before me Singer has not demonstrated that there are no material issues of fact as to this claim which require trial and summary judgment on the claim must therefore be denied."

Had the matter stopped there, we would not feel constrained to follow Judge Bryan, for it is plain that because of the parties' neglect the court lacked sufficient information in proper form to consider the merits of the alternative claim and in such circumstances the doctrine of law of the case is not a strait jacket.[1] However, the matter did not stop there. Instead, Singer moved successfully for reargument asserting that "this claim of breach must be dismissed because as a matter of law the contract provided the exclusive remedy of termination for any alleged inadequacy of performance (Point I), or, alternatively, because on the basis of undisputed facts now before the Court, there has been no breach (Point II)."

Singer then made the precise argument, cited the same authorities and presented the identical facts now urged on this second attempt for summary judgment in its favor. There is no suggestion that there are any newly discovered facts or that there has been a change in the applicable law. In short, the very points now made were all made and rejected by this court when Judge Bryan granted reargument and adhered to his original decision. This squarely

1. Johnson v. Cadillac Motor Car Co., 261 F. 878, 882-883, 8 A.L.R. 1023 (2d Cir. 1919); Zdanok v. Glidden Co., Durkee Famous Foods Div., 327 F.2d 944, 952-953 (2d Cir.), cert. denied, 377 U.S. 934, 84 S.Ct. 1338, 12 L.Ed.2d 298 (1964).

raises the question of whether this motion is barred by the doctrine of law of the case.

[1, 2] As Judge Learned Hand said, "the 'law of the case' does not readily bind a court to its former decisions, but is only addressed to its good sense." [2] Since the doctrine is addressed to the court's "good sense," it ought not be imposed on a mechanical basis.[3] Rather, its applicability turns upon a number of considerations.[4] One is judicial economy and another is the unseemliness of a court's altering a legal ruling as to the same litigants. A decision in a given case is, therefore, said to be the law of the case, and no question previously decided will be decided again unless there is some compelling reason.[5]

[3] The balance of considerations here argues strongly against overruling Judge Bryan, for, although we are not compelled to follow his decision, in all "good sense" we are unable to find any convincing reason for refusing to do so.[6] We rest on his opinion both because it is the law of the case and because we are satisfied with it.[7]

Singer contends that the alternative claim for breach of the December agreement must be dismissed because as a matter of law Singer was not required under the contract to do anything until January 1966 and because the contract provides the exclusive remedy of termination for any alleged inadequacy of performance. Singer's contentions are based on paragraph 10 of the contract, which, in pertinent part, provides:

> "Reversion Right. In the event * * * [Singer] does not incur direct and indirect costs of at least $100,000 for marketing, promoting and advertising the Product * * * in any calendar year between January 1, 1966 and the December 31st preceding the time of expiration of * * * [Singer's] duty to pay royalties hereunder * * * [Perma] upon written notice * * * may notify * * * [Singer] of its exercise of its rights * * * [to reversion of its patents, tools, etc.]."

It was further provided that upon receipt of such notice, Singer "shall assign and convey to * * * [Perma] the patents and patent application assigned and conveyed hereunder" in consideration of Perma's payment to Singer of all its debts, plus $50,000 in cash, whereupon the December agreement would terminate.

Relying on the above provision and its tender of the patents and waiver of the $50,000 cash payment, Singer argues that paragraph 10 defines not only the sole measure of the performance required of Singer, but also specifies Perma's exclusive remedy for breach. We think, however, that paragraph 10 simply gives Perma an option to recover its patents and terminate the contract upon specified conditions. The option rests not with Singer but with Perma.

[4, 5] An option to terminate is not an exclusive remedy, and a party is not obligated to exercise such an option but may stand on his rights.[8] There is, thus, no basis in the agreement for Singer's contention that "under any conceivable version of the facts, as a matter of law Perma's sole remedy would be to reacquire its patents." Nor do we find

2. Higgins v. California Prune & Apricot Grower, Inc., 3 F.2d 896, 898 (2d Cir. 1924).

3. United States v. Russell Mfg. Co., 349 F. 2d 13, 19 (2d Cir. 1965).

4. Zdanok v. Glidden Co., Durkee Famous Foods Div., *supra*, 327 F.2d at 953.

5. Wharton v. Hirsch, 348 F.2d 906, 907 (2d Cir. 1965).

6. Banco Nacional de Cuba v. Farr, 383 F.2d 166, 183 (2d Cir. 1967).

7. See, United States v. Certain Property, etc., 344 F.2d 142, 144 (2d Cir. 1965).

8. Patents, 43 N.Y. Jurisprudence § 47; Bernard v. Golden Gate Mfg. Co., 187 App.Div. 542, 175 N.Y.S. 741, 744 (1st Dep't 1919), aff'd, 231 N.Y. 591, 132 N.E. 900 (1921).

support in the cases urged by Singer[9] for all of them, as Singer concedes, are predicated on the fact that patents were assigned without an express agreement by the assignee to pay any specified amount or to perform any particular act. That premise is absent here. It is not supplied by reiteration of the complaint's erroneous conclusion that the contract is illusory because Singer "was not bound to perform any covenants or agreements." That construction of the agreement is frivolous, and it was expressly and correctly rejected by both Judge Bryan and the Court of Appeals.

[6] Nor is the premise found in paragraph 13 of the contract, which, under the heading "Marketing," states that the "Buyer in its absolute discretion shall determine the method of manufacturing, exploiting and marketing the Product." We think it perfectly plain that paragraph 13 merely specifies that control of the means and methods of performance rests in Singer's discretion. The clause cannot be stretched to give Singer an absolute right unilaterally to abandon the contract or to terminate it at will.

Nor do we find merit in Singer's contention that as a matter of law Perma is limited to a claim for rescission. The *Neenan*, *Crowe* and *Matzka* cases[10] each involved suits by a licensor seeking not damages but rescission. None holds that the plaintiff may not recover damages but simply ground equity jurisdiction on the proposition that the legal remedy was inadequate because damages were of a speculative nature. Indeed, the *Crowe* case specifically recognized the right of the plaintiff "first to hold the contract rescinded or second to sue on the breach for damages." Our rejection of these authorities should not be understood as a holding either that the fact of, or the amount of, plaintiff's damages, if any, is certain. It may well be that there are no damages or that, if there are, they are of a speculative nature.[11] We simply hold that that question cannot be determined on the record before us but must await developments at the trial.

[7, 8] Equally without merit is Perma's contention that Singer breached the December agreement by not shipping the product at once and throughout 1965. Perma claims support for this contention in the fact that Singer assumed five contracts previously made by Perma with various distributors which called for delivery of the product either in 1964 or in 1965. It is apparent, however, that the product never was perfected during 1965. Concededly, the parties were engaged in joint efforts to correct the defects at least until the end of July, and the product is still not fail-safe. Perrino admitted on his deposition that a malfunction will lead to a complete loss of braking power even today. Yet, in promotional material shown to Singer before the June agreement, Perma represented that the device had "a fail-safe feature which will automatically revert to the standard braking system in case of failure." Thus, the device was not fail-safe as that term is defined in im-

9. Corbet v. Manhattan Brass Co., 93 App. Div. 217, 87 N.Y.S. 577 (1st Dep't 1904), modified, 183 N.Y. 548, 76 N.E. 1092 (1905); Ebert v. Loewenstein, 42 App. Div. 109, 58 N.Y.S. 889 (1st Dep't 1899), aff'd. 167 N.Y. 577, 60 N.E. 1110 (1901); Born v. Schrenkeisen, 110 N.Y. 55, 17 N.E. 339 (1888); Wing v. Ansonia Clock Co., 102 N.Y. 531, 7 N.E. 621 (1886); Rose v. Imbrey, 37 N.Y.S.2d 703 (Sup.Ct., Bronx Co. 1942).

10. Neenan v. Otis Elevator Co., 191 F. 414 (2d Cir. 1912); Crowe v. Oscar Barnett Foundry Co., 213 F. 864 (D. N.J.1917); Matzka Corp. v. Kelly Dry-Pure Juice Corp., 19 Del.Ch. 359, 168 A. 70 (1933).

11. See Bigelow v. RKO Radio Pictures, Inc., 327 U.S. 251, 264, 66 S.Ct. 574, 90 L.Ed. 652 (1946); Story Parchment Co. v. Paterson Parchment Paper Co., 282 U.S. 555, 562, 51 S.Ct. 248, 75 L.Ed. 544 (1931); Eastman Kodak Co. of New York v. Southern Photo Materials Co., 273 U.S. 359, 378, 47 S.Ct. 400, 71 L.Ed. 684 (1927).

partial dictionaries[12] and by Perma before there was any motive to create an issue of fact. We think that in view of these immutable admissions by plaintiff there can be no genuine issue that the device was not fail-safe when Singer decided to abandon the contract.

It is nothing short of preposterous, in view of the modern doctrine of strict liability,[14] to suggest that Singer was under a duty to ship a product concededly defective. Indeed, Perrino, as a deponent, admitted as much,[15] and as a litigant based his rejected claim for breach of the June contract on Singer's alleged shipment of defective product.

[9] More significantly, we find no merit in the foregoing contentions of either party because the contract, as construed correctly by Judge Bryan and the Court of Appeals, neither permits Singer to sit idly until 1966 nor requires it to start manufacturing or shipping at once. Rather, it obligates Singer to use its best efforts to manufacture and market the product.[16]

"Best efforts," like "reasonable care," is a term which necessarily takes its meaning from the circumstances. Set against the background of defects in both the quality and design of the product, which the parties had experienced over a six-month period while operating under the June 1964 contract, we think that "best efforts" here means that Singer was required to continue collaborating with Perma for a reasonable length of time in a good faith effort to solve the problems then preventing marketing of the product. Clearly, that is

12. Perma's pre-litigation definition conforms to the one given in the dictionary: "fail-safe (fāl'sāf'), *adj.* 1. *Electronics.* pertaining to or noting a mechanism built into a system, as in an early warning system or a nuclear reactor, for insuring safety should the system fail to operate properly. 2. equipped with a second system that insures continued operation even if the primary system fails. • • • [adj., n. use of v. phrase *fail safe*]." Random House Dictionary of the English Language (Unabridged Ed. 1969).

13. Perrino the affiant asserts that whether the device was fail-safe when Singer decided not to market it is the core of the present dispute between Perma and Singer. The assertion, of course, is an argumentative conclusion and we reject it. Perrino attempts, in his affidavit, to extricate himself from his admissions in his deposition by tailoring the definition of "fail-safe" and coloring his testimony with the lame explanation that when he said a malfunction can lead to a loss of brakes he merely meant that a mechanical product not correctly built may not function and that the loss of brakes does not demonstate an absence of a fail-safe feature. Material issues of fact, however, cannot be created simply by contradictory or "inconsistent statements made by Perrino the deponent and Perrino the affiant." 410 F.2d at 578.

14. Goldberg v. Kollsman Instrument Corp., 12 N.Y.2d 432, 240 N.Y.S.2d 592 (1963).

15. "Q That's because you wouldn't ship 500 replacement units or wouldn't permit the shipment of 500 replacement units if you believed them to be defective, is that right?

"A That's right. But that doesn't mean that these 500 units may not be part of the units which were shipped over my objection to Mr. Romel that defective units should not be shipped." Deposition of Perrino, p. 190.

16. The complaint alleges in Count II that the December agreement was illusory because Singer was not bound to perform any covenants or agreements and retained complete discretion as to manufacturing and marketing. Urged by Singer, Judge Bryan rejected the contention by reading the *Duff-Gordon* rule into the agreement and thus found an obligation on defendant's part to use its best efforts to manufacture and market the product.

The *Duff-Gordon* rule is that "a promise may be lacking, and yet the whole writing may be 'instinct with an obligation' imperfectly expressed." Wood v. Lucy, Lady Duff-Gordon, 222 N.Y. 88, 91, 118 N.E. 214 (1917). Under the rule, the implication to use "best efforts" is clearly predicated on the lack of an express promise.

While it is true that the December agreement did contain an express promise of the performance required by Singer after January 1, 1966, it was silent as to what Singer was supposed to do from December 1964 until then. We, therefore, think that Judge Bryan was correct in filling the void with an implied promise.

what the parties intended, for that is what they started doing immediately. Singer spent substantial time and money and the parties engaged in joint efforts for over six months to solve the problems. Their intention to keep trying is also revealed in the fact that simultaneously with the December contract, they entered into an agreement whereby Perma undertook to furnish know-how and technical assistance to Singer for the next six months in consideration of Singer's payment of $9,800 per month. The intention is further manifested in the main agreement's postponement of Singer's obligation to spend money on marketing and promotion until January 1, 1966. That, we think, shows an understanding that further experimental work would be necessary to perfect the product before Singer could be expected to put it on the market.

Singer's obligation to continue making the collaborative effort to correct the defects arose immediately upon entering into the December agreement. The obligation, however, was not perpetual. Rather, we think, since no time was stated for performance, Singer was obliged to keep trying for a reasonable length of time.[17]

Our construction of the contract is consistent with Judge Bryan's and compels us to reject Singer's contentions that its only duty was to market and promote the product after January 1, 1966, as specified in paragraph 10 of the contract, and that Perma's sole remedy for an inadequate performance both under the contract and as a matter of law was to terminate the agreement and recover its patents.

We conclude, therefore, that Judge Bryan was correct in rejecting Singer's contention that on any conceivable state of facts Singer is entitled to judgment dismissing the alternative claim as a matter of law.

[10] We turn, then, to whether there are any genuine issues of fact requiring trial. The factual issue, if any, posed by the contract as construed by the court, is whether Singer did use its best efforts for a reasonable length of time in collaboration with Perma to perfect the product in order to be in a position to market it.

There is no question that Singer did spend considerable time and money in an effort to perfect the product. Indeed, the Court of Appeals noted "there was substantial performance under the December contract, at least until Singer concluded that the product was not 'fail-safe' and hence unmarketable. * * * Perrino admitted in his deposition that the parties were engaged in joint efforts to solve the 'fail-safe' problem as late as six months after the December contract was negotiated." 410 F.2d at 576–577.

The issue, however, is not whether there was substantial performance, as Singer contends, or whether the product was "fail-safe," as Perma contends, but whether, as Judge Bryan stated, Singer's performance was adequate. For example: (1) Did Singer use its best efforts for a reasonable time in collaboration with Perma to perfect the product under all of the circumstances? (2) In view of the fact that the device was not "fail-safe," was Singer justified in abandoning the contract either because it was impossible to make the device "fail-safe" or because it could not be made "fail-safe" without unreasonable, unwarranted or impractical efforts and expenditures of time and money out of all proportion to engineering and economic realities?

Such questions could not be answered definitively on the basis of the record before Judge Bryan, nor can we answer them on the refurbished record before us.

In the first place, the voluminous depositions were directed not to breach or performance of the December agreement but to breach or performance of the June contract, to fraud or the lack of it as to the December agreement, and to

17. 1 Williston, Contracts § 38, pp. 112–113 (3d ed. 1957).

Singer's counterclaim for fraud. This is understandable because no one paid any attention to the alternative claim for breach of the December agreement and, even if the claim had been noticed, there was no suggestion at that time of an implicit promise by Singer to use its best efforts. That promise did not come into the case until Judge Bryan's decision long after the depositions were closed. As a result, only a few of the thousands of questions asked have any relevance whatever to the issues now before the court.

In the second place, Singer's papers on this motion are directed not to a demonstration of the absence of a genuine factual issue respecting its use of its best efforts but to the rejected proposition that the claim is moot as a matter of law because Singer had a right to terminate the contract upon tendering the patents to Perma. Likewise, Perma's papers are not addressed to the issue. Rather, they contain a mass of irrelevancies, arguments, opinions and conclusions. The burden, however, of demonstrating the absence of any genuine issue of fact is upon Singer, and it has failed to do so.

[11] Finally, a motion for summary judgment is always addressed to the discretion of the court.[18]

The device which is the subject matter of this litigation has over 100 separate parts and is an extremely complicated mechanism. Much of the voluminous depositions is involved with engineering technicalities, and, as we have seen, there is little in the depositions of relevance to the present issue. The affidavits, exhibits and memoranda are extensive. The sheer quantity of the material to be analyzed cautions against the expenditure of judicial time in an effort to sift out and piece together the undisputed facts essential to a summary judgment. The issues are further obscured by argumentative statements and counter-assertions, conclusions and conflicting inferences which the parties attempt to draw from an incomplete record. Too much is left open.

Plainly, there is a genuine issue as to whether Singer, in collaboration with Perma, did use its best efforts for a reasonable length of time to correct the defects in order to make the product marketable.[19] When we add the fact that summary judgment has already been once denied, it is readily apparent that on the record here summary judgment would rest on quicksand. The cumulative weight of the obstacles is too heavy for so frail a vehicle as summary judgment.[20]

We are convinced under the circumstances that sound judicial administration dictates that the court withhold judgment on the involved questions of law and fact presented here until the whole structure stands on a solid foundation established on a trial where the evidence can be directed to the relevant issue, the proof more deeply developed, the ultimate facts definitively found and the issues put into clear focus. Summary procedures, however salutary, where issues are clear-cut and simple present a treacherous record for deciding complex litigation. Good judicial administration demands that judgment of the ultimate questions involved in this case be withheld until there is a solid basis for findings by a court or jury based on litigation or a comprehensive statement of agreed facts.[21]

Accordingly, the motion for summary judgment is denied.

So ordered.

18. Rockefeller Center Luncheon Club v. Johnson, 116 F.Supp. 437 (S.D.N.Y. 1953); 6 Moore, Federal Practice ¶ 56.15 [6], at 2421 (2d ed. 1966).

19. There may be other issues of fact, and we do not wish to foreclose the parties or the pre-trial or trial judge in that regard.

20. Boston & M. R.R. v. Lehigh & N. E. R.R., 188 F.Supp. 486, 491 (S.D.N.Y. 1960), appeals dismissed per curiam, 287 F.2d 678 (2d Cir. 1961).

21. Kennedy v. Silas Mason Co., 334 U.S. 249, 256-257, 68 S.Ct. 1031, 92 L.Ed. 1347 (1948).

OPINION AND ORDER OF METZNER, J., DATED MAY 14, 1970 (R 69)

[R 69, p 1]

UNITED STATES DISTRICT COURT

SOUTHERN DISTRICT OF NEW YORK

- x

:

SAME CAPTION :

:

:

- x

METZNER, D. J.:

Defendant moves for summary judgment dismissing the complaint on the ground that the contract sued upon was induced by material misrepresentations.

This is defendant's third motion for summary judgment. The first motion was disposed of by Judge Bryan. The pertinent part of that opinion, which is applicable to the present motion, held that the complaint alleged a substantial claim for breach of the December 21, 1964 contract. Since neither of the parties had addressed themselves to that claim, the defendant had not demonstrated

[R 69, p 2]

that there were no material issues of fact. Therefore, the motion for summary judgment was denied. Judge Bryan's order was affirmed on appeal. 410 F.2d 572 (2d Cir. 1969).

Defendant then brought on a second motion for summary judgment which was denied by Judge MacMahon on January 27, 1970. In the papers submitted on that motion, defendant argued:

> "That Singer was justified in abandoning the project because of the fail-safe problem would seem clear from the fact that Perrino admitted on his deposition, even as of today, any malfunction of the device might result in a total loss of braking power."

It further argued:

> "Thus it is plain that the dispute between the parties is not as to whether a failure in the Perma device might produce a total loss of brakes, but whether that conceded fact shows that the device is not fail-safe... But in any event, we think it is plain that Singer was amply justified in the exercise of its absolute discretion in taking the same view as Governor Rockefeller and determining that under those circumstances, the device was not fail-safe and, therefore, in abandoning the project.
>
> "We submit that this disposes of the entire litigation."

In those papers defendant also referred to reports on the operations of the product which it claims

[R 69, p 3]

it received for the first time in January 1965. It stated that it was disturbed by these reports "since Singer had entered into the agreement in June 1964 largely on the basis of a movie shown them by Perma which stated categorically that the device had a 'fail-safe feature which will automatically revert to the standard braking system in case of failure.'"

Judge MacMahon discussed defendant's obligations

under the contract. He found that there was a genuine issue as to whether the defendant, in collaborating with the plaintiff, used its best efforts for a reasonable length of time to correct the defects in order to make the product marketable. He said:

> "For example: (1) Did Singer use its best efforts for a reasonable time in collaboration with Perma to perfect the product under all of the circumstances? (2) In view of the fact that the device was not 'fail-safe,' was Singer justified in abandoning the contract either because it was impossible to make the device 'fail-safe' or because it could not be made 'fail-safe' without unreasonable, unwarranted or impractical efforts and expenditures of time and money out of all proportion to engineering and economic realities?"

On this third motion, defendant now argues that since Judge MacMahon found as of fact that the

[R 69, p 4]

product was not fail-safe, it should succeed on this motion because of its affirmative defense that it entered into the contract because of the false representation that the product was fail-safe. In essence this is a reiteration of defendant's position before Judge MacMahon, quoted above, buttressed by Judge MacMahon's finding that the product was not fail-safe.

Whatever effect the representation in the film may have had prior to June 1964, it is perfectly obvious from the record and the prior opinions that defendant could not have been under any delusion that the product was fail-

safe because of events and transactions between the parties subsequent to the viewing of that film. The contract in issue was entered into in December 1964.

Defendant argues that in view of Judge MacMahon's finding that the product was not fail-safe, there no longer exists a controverted issue as to Singer's affirmative defense that the contract was entered into on reliance on a material misrepresentation. This position overlooks the above-quoted portion of Judge MacMahon's opinion indicating that issues for a trial do exist despite the fact that the product was not fail-safe.

[R 69, p 5]

Motion is denied. So ordered.

Dated: New York, N.Y.
May 14, 1970

/s/ Charles M. Metzner
U. S. D. J.

SUPPLEMENTAL MEMORANDUM IN RESPONSE TO DEFENDANT'S PRE-TRIAL MEMORANDUM FILED NOVEMBER 9, 1971, PAGES 1, 6-8 (R 171 PORTION)

[R 171, p 1]

UNITED STATES DISTRICT COURT
SOUTHERN DISTRICT OF NEW YORK

- x

:

SAME CAPTION :

:

:

- x

Plaintiff submits this Supplemental Pre-Trial Memorandum to demonstrate to the Pre-Trial Court that, contrary to the assertions contained in defendant's Pre-Trial Memorandum, the issues remaining for trial have already been defined and limited by prior decisions of this Court and that the participation of the parties herein in this Court's pre-trial procedures should be directed to the issues so defined and limited. Defendant, instead of focusing its Pre-Trial Memorandum on the facts and issues remaining to be tried and the objections to plaintiff's exhibits, now proposes to use the trial of this case to relitigate the meaning of the contract between the parties dated December 21, 1964, ("December contract") and the nature of Singer's duties thereunder - all of which have been previously decided by no less than three judges of this

[R 171]

Court. Defendant also claims plaintiff should in some manner be penalized for having presented inconsistent positions as the course of this litigation. Plaintiff submits this Memorandum to demonstrate (1) that the construction of the December contract has been extensively and conclusively litigated by the parties already*; and (2) plaintiff has not taken inconsistent positions.

* * * *

[R 171, p 6]

II

PLAINTIFF'S PRIOR CONTENTIONS ARE NOT INCONSISTENT

Defendant claims that plaintiff has taken inconsistent positions. Defendant suggests that plaintiff first took the position that the December contract required no performance by Singer, thereafter that the product was fail-safe, and finally that the product was not fail-safe and Singer had a duty to make it so. Plaintiff's position with respect to the "illusory" nature of the December contract is fully discussed above at pages 2-3. What remains for explanation is plaintiff's allegedly inconsistent "fail-safe" argument. The question whether the product was fail-safe is not directly relevant to the trial of this case. Rather the relevant question is whether the

*Perma v. Singer, 66 Civ. 665 and 666 (S.D.N.Y. - March 28, 1968 (Footnote continued on the next page.)

product could have been made fail-safe by Singer's use of its best efforts. However, even assuming the relevance of the first question, plaintiff has not taken inconsistent positions.

There has never been any question either before the December contract or now that the invention contains a number of "fail-safe features" which are designed to prevent any probable failure of the anti-skid unit from adversely affecting the automotive brakes - i.e., any probable failure of the unit should not cause a loss of brakes. As stated, these features cover only the probable modes of failure; they do not provide for every conceivable theoretical mode of failure. Singer agreed in 1964 that such a product with such limited fail-safety was marketable - indeed Singer attempted to market the product. However, in July 1965 Singer placed new management in charge of the invention who changed the standards for marketing the invention with respect

[R 171, p 7]

to the desired degree of fail-safety. The new management concluded that not just "probable" modes of failure should be anticipated, but rather, in view of the current developments with respect to product liability, the invention, to be marketable, must contain further fail-safe characteristics so that under any conceivable theoretical mode of failure, no impairment of the operation of the brakes would result.

On the basis of this new standard, defendant claimed in 1965 and before Judge MacMahon that the unit was not marketable. Plaintiff, on the other hand, contended in 1965 and before Judge MacMahon that defendant had a duty to market the product with the fail safe features it then incorporated, as such marketing was contemplated by the parties when the contract was executed. Plaintiff contended that the said fail safe features made the product "fail safe" according to generally accepted definitions of the phrase.

Plaintiff contended then and still believes that defendant's new standard was a sham, fabricated as an excuse to abandon the contract.

After establishing a definition of fail-safety somewhat between the contentions of the parties, Judge MacMahon held that defendant was justified in withholding the product from the market because of modern views of strict product liability until defendant completed the necessary changes. Judge MacMahon foreclosed the use by Singer of its change in criteria as a per se excuse for non-performance. Singer was obligated to use its best efforts to satisfy whatever new standards it imposed by correspondingly improving the product. In other words, the fact that the product did not meet Singer's new fail-safe criteria is not an excuse for its abandoning the

[R 171, p 8]

contract unless it first expended its "best efforts" to

[R 171]

render the product fail safe. Plaintiff still believes that, the product should have been marketed as it was then developed. But Plaintiff further believes that, if Singer wanted a product with additional features, Singer should have added those features. These two positions are in no way contradictory and are not inconsistent. Nor does plaintiff's abandonment of its position that the product should have been marketed as it was then developed create any inconsistency; plaintiff is simply no longer free to assert that position as a contention at trial in view of Judge MacMahon's decision.

CONCLUSION

The prior decisions by this court in this case have already construed the contract and defined the obligations of the parties thereunder. The positions of the parties have correspondingly been molded and refined by judicial mandate, with the result that a clear issue exists for trial:

Did the Defendant use its best efforts, for a reasonable period of time in collaboration with Perma to make the invention "fail-safe"?

Defendant should not now be allowed to relitigate issues repeatedly and conclusively resolved by the prior decisions in this case.

It is time defendant came to grips with the trial of this matter, not yesterday's motions.

Respectfully submitted,

POLETTI FREIDIN
PRASHKER FELDMAN & GARTNER
Attorneys for Plaintiff
777 Third Avenue
New York, New York 10017
Tel. No.: 688-3200

[R 171]

PARAGRAPHS 9(b)1 AND 9(c)(a) OF THE PRE-TRIAL ORDER, DATED APRIL 3, 1972, OF McLEAN, J. (PAGE 15, LINE 12-LINE 30; PAGE 19, LINE 12-PAGE 20, LINE 1)(R 97 PORTION)

* * * *

[R 97, p 15]

9. (b) Issues which plaintiff contends remain to be tried are as follows:

1. Plaintiff's Affirmative Case

(a) Did defendant use its best efforts for a reasonable length of time in collaboration with Perma to make the invention fail-safe?

(b) If defendant claims at trial that it abandoned the contract for reasons other than or in addition to fail-safety, what defects in the invention, if any, caused in 1965 Singer's abandonment of said invention?

(c) Did defendant use its best efforts for a reasonable length of time in collaboration with Perma to resolve the defects in the invention that shall be proved at trial to be Singer's alleged reasons for its abandonment of the invention?

(d) If defendant failed to use its best efforts as set forth in the preceding paragraphs, what damages is plaintiff entitled to recover?

* * * *

[R 97]

[R 97, p 19]

9. (c) Issues which defendant contends remain to be tried are as follows:

(a) Plaintiff's Affirmative Case.

(1) Was defendant obligated, under the terms of the December contract, to use its best efforts for a reasonable period of time in collaboration with plaintiff, to perfect the Perma anti-skid device so as to make it fail-safe and marketable?

(2) If it be found that defendant did have such an obligation, did defendant use its best efforts for a reasonable period of time in collaboration with plaintiff to perfect the device so as to make it fail-safe and marketable?

(3) If it be found that defendant did have such an obligation and that defendant did not use its best efforts for a reasonable period of time in collaboration with plaintiff to perfect the device so as to make it fail-safe and marketable, what damages,

[R 97, p 20]

if any, did plaintiff suffer?

* * * *

TRANSCRIPT OF HEARING BEFORE JUDGE McLEAN ON JULY 5, 1972 (PAGE 53, LINE 7 - PAGE 55, LINE 7; PAGE 61, LINE 20 - PAGE 61(a), LINE 7) (R 100 PORTION)

* * * *

[R 100, p 53]

THE COURT: All right.

Now, on the statement of the issues with respect to the plaintiff's case, I am going to follow Judge MacMahon, and I have hurriedly scratched down here a statement of those issues, and I hold no brief for the polish of the language. You can polish it up as you will, as long as you adhere to the substance. But substantially it would amount to this with respect to the plaintiff's affirmative case.

Before the abandonment, or before it abandoned the contract, had defendant used its best efforts for a reasonable length of time in collaboration with plaintiff to perfect the product, so as to make it marketable?

Two, if not, did defendant's abandonment of the contract damage the plaintiff?

Three, if so, what is the amount of that damage?

Now, it seems to me that that is enough to cover the issues. It follows, of course, that if the defendant had used its best efforts for a reasonable length of time in collaboration with the plaintiff to perfect the product so

as to make it marketable and had not been able to accomplish that objective, then the abandonment was proper and plaintiff is not entitled to recover.

I don't think we need state it both ways in the statement of the issues. I can explain that to the jury at the proper time.

Also, as Judge MacMahon said, in determining this question as to whether or not the defendant had used its best efforts for a reasonable length of time, one must take into account not only whether it was absolutely impossible to perfect the product so as to make it marketable but whether it was impracticable to do so without an unreasonably large expenditure of money.

Judge MacMahon made that clear, and I can charge the jury on that, too. I intend to follow that.

I don't think you need to say that in the formal statement of issues, but surely the defendant could not be required on any reasonable standard to keep on working, no matter how much it cost. There must be a reasonable limit, some reasonable limit, and Judge MacMahon expressed that thought.

MR. GRAND: Your Honor, look at page 749, the right hand column, about two-thirds of the way down the page.

THE COURT: That is right. On page 749 of 308

[R 100, p 55]

Fed Supp.

Now, this avoids the use of the phrase "fail-safe". It seems to me the issue should be stated in terms of making the product marketable for whatever reason. There may have been other reasons why it wasn't marketable, for all I know, in addition to its alleged lack of safety.

* * * *

[R 100, p 61]

THE COURT: Is there anything else anybody wants to bring up?

MR. CHANLER: I think, for the record, your Honor, I would like to note that I take an exception to your Honor's decision that Judge MacMahon's statement as to what he thinks the issues are is binding.

[R 100, p 61(a)]

THE COURT: I don't think I said that. I said I was going to follow Judge MacMahon. But you can have an exception to it.

MR. CHANLER: I take an exception.

THE COURT: Is there anything else?

All right. We stand adjourned.

SUPPLEMENTAL PRE-TRIAL ORDER DATED SEPTEMBER 28, 1973 OF DUFFY, J. (R 102)

[R 102, p 1]

UNITED STATES DISTRICT COURT

SOUTHERN DISTRICT OF NEW YORK

- x

:

SAME CAPTION :

:

:

- x

On July 5, 1972, the parties to this action, by their attorneys, appeared before the Court at a pre-trial conference pursuant to local Calendar Rules 6 and 13 and Rule 16 of the Federal Rules of Civil Procedure, and the following action was taken to amend the Pre-Trial Order herein dated April 3, 1972, as follows:

I. Issues for Trial: Paragraph 9 of the Pre-Trial Order is hereby deleted in its entirety and the following is substituted therefor:

"9. The trial of this action will be based on the following issues:

A. Plaintiff's Affirmative Case

1. Before it abandoned the contract dated December 21, 1964, did defendant use

its best efforts for a reasonable period of time in collaboration with plaintiff to perfect the product so as to make it marketable?

2. If not, did defendant's abandonment of the contract damage plaintiff?

[R 102, p 2]

3. If so, what is the amount of the damage?

B. Defendant's Affirmative Defense.

1. Did plaintiff make any of the affirmative misrepresentations or conceal from defendant the information alleged in defendant's affirmative defense?

2. If so, were the misrepresentations made or was the information concealed material?

3. If questions "B 1" and "B 2" were answered affirmatively, did defendant rely on these misrepresentations or concealments in entering into the contract dated December 21, 1964?

C. Defendant's Counterclaim.

1. Did plaintiff intentionally make any of the affirmative misrepresentations or conceal from defendant the information alleged in defendant's counterclaim?

[R 102

2. If so, were the misrepresentations made or was the information concealed material?

3. If questions "C 1" and "C 2" were answered affirmatively, did defendant rely on these misrepresentations or concealments in entering into the contract dated June 18, 1964?

4. If questions "C 1", "C 2" and "C 3"

[R 102, p 3]

are answered affirmatively, was defendant damaged thereby?

5. If questions "C 1", "C 2", "C 3" and "C 4" are answered affirmatively, what is the amount of defendant's damage?

6. If questions "C 1" and "C 2" are answered affirmatively, did defendant rely on these misrepresentations or concealments in entering into the contract dated December 21, 1964?

7. If questions "C 1", "C 2" and "C 6" are answered affirmatively, was defendant damaged thereby?

8. If questions "C 1", "C 2", "C 6" and "C 7" are answered affirmatively, what is the amount of defendant's damage?

II. Miscellaneous: At a pre-trial conference on July 5, 1972, Judge Edward C. McLean directed that in the event that defendant intended to claim at trial that the Perma Anti-Skid Device was not marketable on grounds in addition to:

(a) engine stalls resulted in vacuum loss and brake line pressures below specifications;

(b) vacuum at slow automobile speeds was inadequate to prevent slight lag in operation of invention;

(c) the unit could be "fooled"; and

(d) reliability testing of the invention and its components was not complete;

[R 102, p 4]

then it shall so advise plaintiff not later than October 8, 1972, and, in doing so, shall state in writing the specific claims it intends to assert. Defendant has complied with said order and did, on October 6, 1972, serve on plaintiff a list designating such additional claims.

Dated: New York, New York
Sept. 28, 1973

SO ORDERED:

/s/ Kevin Thomas Duffy
U.S.D.J.

MEMORANDUM OF LAW IN SUPPORT OF DEFENDANT'S MOTION TO STRIKE, FILED MAY 1, 1974 (R 185)

[R 185, p 1]

UNITED STATES DISTRICT COURT

SOUTHERN DISTRICT OF NEW YORK

- x

:

SAME CAPTION :

:

:

- x

MEMORANDUM IN SUPPORT OF DEFENDANT'S MOTION TO STRIKE PLAINTIFF'S EXHIBITS 123, 124, 125, 127, 128, 129, 132, 133, 134 AND 135.

WINTHROP, STIMSON, PUTNAM & ROBERTS
Attorneys for Defendant,
The Singer Company
40 Wall Street
New York, New York 10005
Telephone: (212) WH3-0700

Of Counsel:

Terence H. Benbow
Jonathan K. Lagemann

UNITED STATES DISTRICT COURT

SOUTHERN DISTRICT OF NEW YORK

- x

SAME CAPTION

- x

MEMORANDUM IN SUPPORT OF DEFENDANT'S MOTION TO STRIKE PLAINTIFF'S EXHIBITS 123, 124, 125, 127, 128, 129, 132, 133, 134 AND 135.

This memorandum is submitted by The Singer Company in support of its motion to strike exhibits and testimony relating to computer simulations purporting to represent the operational characteristics of the Perma anti-skid device.

PRELIMINARY STATEMENT

Through its expert witnesses, plaintiff has sought to introduce testimony and exhibits* relating to computer

* Plaintiff's exhibits 123, 124, 125, 127, 128, 129, 132, 133, 134 and 135 contain all the heretofore identified inputs and results of the computer simulations offered by plaintiff. It appears, however, that much of the identified input data was not actually entered into the computational process. Tr. at pp. 3787-89

simulations allegedly representing the performance of the Perma anti-skid device. The simulations were performed during the course of trial without notice and an opportunity to participate being afforded The Singer Company.

There are apparently no reported opinions setting forth the foundations required for the admission of computer analyses or simulations into evidence. See, Computer Law Service, § 5-4.2. Although plaintiff's offer presents a question of first impression, there is already authority that simulations are inadmissible on a number of grounds, including, inter alia, lack of foundation, lack of notice and opportunity to participate and plaintiff's failure to provide best evidence.

There Has Been No Foundation Laid for the Admission of Plaintiff's Simulations as a Machine Prepared Study.

Since the advent of computers, there has been an adage among computer operators and programmers that "garbage in equals garbage out." This statement illustrates the fundamental fact that no computer study is better than the quality of any element of its input data, including, inter alia, the programs, subroutines, and verification procedures employed. It has, therefore, come to be recognized that "the quality of the input data [must] be verified" as

a prerequisite or foundation to the admission of a computer

[R 185, p 4]

study into evidence. Principles of Introduction of Machine Prepared Studies, Report of the Sub-committee on Data Processing of the Committee on Agency Ratemaking of the Section of Administrative Law of the American Bar Association (1964), reprinted in Computer Law Service, § 5-4.2. Computer simulations are utterly unverifiable without the program and knowledge of the computational and logical processes employed. Plaintiff has indicated on the record that this critical information will not be provided. Tr. at 3086-88.

The American Bar Association Subcommittee on Data Processing has promulgated a number of rules for the admission of computerized studies into evidence. Introduction of Machine Prepared Studies, supra (a copy of the American Bar Association's Report is attached hereto as Appendix A for the Court's information). The American Bar Association rules, which set forth the foundation for the admission of computer studies in administrative proceedings, should be applied as an absolute minimum foundation for the admission of computer studies in courts of law.

Plaintiff has not satisfied any of the American Bar Association's criteria for the foundation required for admission of computer studies into evidence. Introduction of Machine Prepared Studies, supra. It is especially note-

worthy that plaintiff has neither introduced nor offered to

[R 185, p 5]

produce evidence tending to satisfy any of the following foundations required by the American Bar Association for the admission of computer studies into evidence:

(1) "[A] copy of the complete machine printout in appropriate machine language". Introduction of Machine Prepared Studies, supra, at p. 6.

(2) "[A] deck of cards, magnetic tapes containing all the data used in the machine study". Introduction of Machine Prepared Studies, supra, at p. 6.

(3) "A listing of the program in whatever language was employed - sometimes called listing of the symbolic program". Introduction of Machine Prepared Studies, supra, at p. 5.

(4) "A listing of the object program in the machine language employed". Introduction of Machine Prepared Studies, supra, at p. 5.

(5) "The test deck that was used in conjunction with the object deck". Introduction of Machine Prepared Studies, supra, at p. 5.

(6) "A system flow chart (in standard symbols) showing all data flow and its sequence". Introduction of Machine Prepared Studies, supra, at p. 4.

(7) "A program flow chart (in standard symbols) reflecting all the processes involved - this is sometimes known as a logic block diagram". Introduction of Machine Prepared Studies, supra, at p. 5.

(8) "A non-technical written exposition of the processes and logic employed to produce the evidence in question, sufficiently elaborate to permit a lawyer to understand the analytical reasoning underlying the process". Introduction of Machine Prepared Studies,

supra, at p. 4 (emphasis added).

[R 185, p 6]

(9) "A non-technical explanation in writing with illustrations of the controls built into the process and those maintained to secure accuracy and completeness". Introduction of Machine Prepared Studies, supra, at p. 4 (emphasis added).

(10)[1] Information " . . . identifying the make and model of machine used and setting forth the kind of verification procedure or techniques used, and if any abnormality in machine operation is disclosed by such verification, the extent and nature of such abnormality". Introduction of Machine Prepared Studies, supra, at p. 5.

(11)[2] That the simulations were ". . . carried on under [Mr. De Villiers'] direct supervision and direction". Introduction of Machine Prepared Studies, supra, at p. 6.

---

1 This foundation is required for the admission into evidence of any data processed and printed out by a computer, United States v. De Georgia, 420 F.2d 889, 893 n.11 (9th Cir. 1969), or by an analytical machine of any type. Roy v. Reid, 329 N.Y.S.2d 417, 419, 38 App. Div.2d 717 (2d Dep't 1972).

2 This foundation is required for the admission into evidence of any data processed and printed out by a computer, Arnold D. Kamen & Co. v. Young, 466 S.W.2d 831, 837 (Tex. Civ. App. 1971) or by an analytical machine of any type. See e.g., Wigmore, The Science of Judicial Proof, 450, cited in Harrington v. Texaco, Inc., 339 F.2d 814, 818 (5th Cir. 1964); Roy v. Reid, 329 N.Y.S.2d at 419, 38 App. Div.2d at 717.

(12)[3] That Mr. De Villiers is ". . . fully qualified and capable of explaining in detail the logic of the programming or messaging of the study and the systems used to verify the machine output". Introduction of Machine Prepared Studies, supra, at p. 6.

[R 185, p 7]

(13)[4] That it gave timely notice of the simulations so that defendant could be ". . . afforded access to work data and be afforded the right of informal conference with proponent's personnel preparing the study as a substitute for formal cross-examination". Introduction of Machine Prepared Studies, supra, at p. 8.

Plaintiff's Simulations Are Inadmissible as Either Experiments or Tests for Lack of Foundation.

Plaintiff has not told the Court whether it offers the simulations as tests, experiments or both. The simula-

---

3 This foundation is required for the admission into evidence of any data processed by and printed out by a computer. See Note, Evidence, The Admissibility of Computer Print-outs of Business Records, 41 Miss. L. J. 604 (1964) describing foundation in King v. State ex rel. Murdock Acceptance Corp., 222 So.2d 393 (Miss. 1969), or by an analytical machine of any type. See e.g., Wigmore, The Science of Judicial Proof, 450, cited in Harrington v. Texaco, Inc., 339 F.2d 814, 818 (5th Cir. 1964); Hawkins Const. Co. v. Matthews Co., Inc., 209 N.W.2d 643, 650-51 (Neb. 1973).

4 This requirement pertains to the admission of all tests and experiments performed post litem motam. Fortunato v. Ford Motor Co., 464 F.2d 962, 966 (2d Cir.), cert. denied, 409 U.S. 1038 (1972); McCormick On Evidence, Section 202 at p. 487 (2d Ed. 1972). See discussion, infra.

lations may, however, be considered experiments insofar as they attempt to recreate a condition or situation as it existed in early 1965 or as a test showing the performance characteristics of a specific piece of equipment. See, McCormick On Evidence, § 202 at 486-87 (2d Ed. 1972). The simulations are inadmissible in either instance because there has been no foundation laid for admission as either tests or experiments.

a. The Simulations are Inadmissible as Experiments

Experimental evidence must be both relevant and probative in order to be admissible. Crown Cork & Seal Co. v. Morton Pharmaceuticals, Inc., 417 F.2d 921, 926 (6th Cir. 1969). In order to be probative, an experiment must have been conducted under identical or substantially similar conditions to the conditions of the transaction at issue. Id., La France v. New York, New Haven & Hartford Railroad Co., 292 F.2d 649, 650 (2d Cir. 1961); McCormick On Evidence § 202.

[R 185, p 8]

The proponent of an experiment has the burden of showing the identity or substantial similarity of conditions. Glick v. White Motor Co., 458 F.2d 1287, 1289 (3d Cir. 1972); McCormick On Evidence, § 202,n. 13 at 485; 29 Am. Jur. 2d Evidence, § 824. The substantial similarity burden is

strictly applied, La France v. New York, New Haven & Hartford Railroad Co., 292 F.2d 649, 650 (2d Cir. 1961); Balian v. General Motors, 296 A.2d 317 (N.J. App. 1972), and the proffered test evidence must be ". . . as nearly identical as possible to the conditions of the litigated happening." McKnight v. Wire Properties Inc., 288 A.2d 405, 407 (D.C. App. 1972).

Plaintiff has clearly failed to satisfy its burden of showing that its simulations portrayed anything identical or substantially similar to the Perma anti-skid device. Plaintiff's expert has admitted that he attempted to simulate only the characteristics of the arming and operation of the governor, Tr. 3787-89; see also formula marked "entered" on plaintiff's exhibit 134, p. 2, and either assumed or ignored the operational characteristics of the remainder of the Perma anti-skid system. Tr. 3787-89; see e.g., formulas marked "entered" on plaintiff's exhibit 134, p. 4. While total identity of conditions is not required, the fact that plaintiff did not even attempt to simulate the operational characteristics of over 95% of the parts and components of the Perma system means that the substantial similarity foundation could not

[R 185, p 9]

possibly have been satisfied. See e.g. Glick v. White Motor Co., 458 F.2d at 1294; La France v. New York, New

Haven & Hartford Railroad Co., 292 F.2d at 650.

The simulations were performed on a mathematical model of a 1968 Ford Thunderbird which, of course, was not available in 1965. Although the mere possibility that the Perma device might perform differently on a 1968 Thunderbird alone negates a claim of substantial similarity, see, La France v. New York, New Haven & Hartford Railroad Co., 292 F.2d at 650, the record already reflects significant differences in braking performance between the experimental vehicle and 1965 and 1966 American automobiles.

Most significantly, the modeled vehicle employed a brake proportioning valve which affected braking performance by varying the ratio of brake torque generated by the front and rear wheels at different master cylinder pressures. Tr. at 3001-02. No American automobile was produced with a brake proportioning valve in 1965 or 1966. 1968 Thunderbirds also employed front disc brakes which affected braking performance by increasing the displacement and pressure requirements needed to lock the front wheels. Front disc brakes had a limited availability in 1965 and 1966 and could be purchased only as optional equipment on higher priced automobiles at that time.

The utilization of a 1968 Thunderbird as an experimental test vehicle in the simulations had to affect the

[R 185, p 10]

performance of the Perma anti-skid device. Plaintiff's experimental or test conditions clearly lacked the degree of similarity required to sustain the admission of stopping distance tests in particular, Armstrong v. Miller, 189 N.W. 2d 688, 692 (N.D. 1971); see also, 9 ALR 3rd 976, or of automotive experiments in general. Glick v. White Motor Co., 458 F.2d at 1294; Habers v. Madigan, 193 S.E.2d 653 (Va. 1973); Weaks v. South Carolina State Highway Dep't, 159 S.E. 2d 234, 237-38 (S.C. 1969).

b. The Simulations are Inadmissible as Tests

Plaintiff's simulations are not authenticated and are therefore inadmissible as tests tending to show the general traits and capabilities of the Perma device. McCormick on Evidence, § 202. If plaintiff cannot establish ". . . the chain of possession and unchanged condition from the taking of the sample . . . to the performance of the analysis" the results of the test are inadmissible for lack of authentication. Durham v. Melly, 221 N.Y.S.2d 366, 369, 14 App. Div.2d 389, 393 (3d Dep't 1961).

Where an analysis is performed by a machine or piece of equipment which has received scientific acceptance and which can perform only a single repetitive analytical process, a test cannot be authenticated absent proof that the machine was error-free, Harrington v. Texaco, Inc.,

339 F.2d 814, 818 (5th Cir. 1964), citing Wigmore, The Science

[R 185, p 11]

of Judicial Proof, at 450; proof that the operator was qualified, Roy v. Reid, 339 N.Y.S.2d 417, 419, 38 App. Div.2d 717 (2nd Dep't 1972); and proof that the inputs and computational processes were verified by the operator. Id. Plaintiff has not crossed even this simple threshold.

Where the analysis is performed by a computer which, of course, will do whatever its programmer tells it to, the test cannot be authenticated without an offer and explanation of all of the analytical and logical processes actually employed. This authentication must include, inter alia, the subjective and objective programs, subroutines, logic blocks, and verification procedures. Introduction of Machine Prepared Studies, supra. This data has not been offered. In the absence of such basic authentication, the simulations are inadmissible as tests. Roy v. Reid, 329 N.Y.S.2d at 419, 38 App. Div.2d at 717.

Plaintiff's Simulations Are Inadmissible For Want of Notice and Opportunity to Participate.

"It has come to be recognized that notice and an opportunity to participate must be given for experiments initiated post litem motam, with the object of using them

in the litigation." McCormick On Evidence § 202, n.21

[R 185, p 12]

at 487 (2d Ed. 1972); See also United States v. De Georgia 420 F.2d 889, 893 n.11 (9th Cir. 1969); Balian v. General Motors, 296 A. 2d 317, 323-24 (N.J. App. 1972). McCormick has concluded that a pre-trial conference is "an appropriate occasion for giving notice of a proposed experiment," Id. so that the court and opposing party can take steps to ensure that the test or experiment is properly and fairly performed. United States v. De Georgia, 420 F.2d at 893, n.9.

The Second Circuit addressed this problem in Fortunato v. Ford Motor Co., 464 F.2d 962, cert. denied, 409 U.S. 1038 (1972):

> "Test results should not even be admissible as evidence, unless made by a qualified independent expert or unless the opposing party has the opportunity to participate in the test." 464 F.2d at 966.

Both Mr. Goor and Mr. De Villiers were hired by plaintiff and cannot claim to be independent experts. If there was notice of the simulations, it was not given prior to the time that the simulations were actually being performed. Plaintiff surely cannot claim to have afforded The Singer Company an opportunity to participate in the performance of the simulations it offers. In the absence of notice and an opportunity to participate, plaintiff's

simulations and all testimony with respect thereto are inadmissible and should be stricken.

[R 185, p 13]

The Simulations Are Inadmissible Because They Are Not the Best Evidence of the Performance and Characteristics of the Perma Anti-Skid Device.

Since the advent of computers, it has been recognized that computer printouts present a best evidence problem. See Freed, A Lawyer's Guide Through the Computer Maze, 6 Practical Lawyer 28 (1966). While printouts are admissible as records where data has been stored in computers in the regular course of business and where the underlying records have been destroyed prior to the running of the printout, Note, The Admissibility of Computer-Kept Business Records, 55 Cornell L. Rev. 1033 (1970), this exception to the best evidence rule is not available to plaintiff's simulations because the hardware was and is available for actual testing or experimentation.

Plaintiff's experts have admitted that "the computer will not simulate everything that one finds in an automobile," Tr. at 2525, and that computers are only a tool used in support of analytical work. Tr. at 2891. Obviously, real-world tests or experiments would provide best evidence of the performance of the Perma anti-skid device.

Plaintiff's contention that it was precluded from

conducting real-world experiments or tests is a canard. Perma anti-skid units were made available to plaintiff's

[R 185, p 14]

counsel on demand. Tests with the unit installed on an automobile could have been safely made on authorized test tracks and skid-pads. Such tests would constitute the best evidence of the performance characteristics of the Perma anti-skid device. Simulations, which at their very best can afford only a shadow or partial reflection of real-world performance, are not best evidence and are therefore inadmissible.

The simulations offered by plaintiff are, moreover, not the best simulations that could have been performed. For example, plaintiff's simulation expert has admitted that he did not test the Perma-Vac to ascertain its response time characteristics, although he could readily have done so on a test stand. Tr. at 3811-12. In view of the large number of assumed inputs where concrete data was readily obtainable, the offer does not even constitute the best simulation evidence and is therefore inadmissible.

The simulations are also inadmissible by virtue of the fact that the original printout sheets have not been offered. It is standard practice in the computer field for the machine to print out the program, subroutines and verification procedures at the commencement of each

computer run. Introduction of Machine Prepared Studies, supra, at p. 6. The use of photocopies which do not contain this

[R 185, p 15]

data creates a strong inference that this critical information was deleted and that the offered exhibits are both incomplete and not best evidence.

CONCLUSION

The simulations are inadmissible for lack of foundation, for lack of notice and opportunity to participate and do not constitute the best evidence of that which it is claimed they portray. Plaintiff's exhibits 123, 124, 125, 127, 128, 129, 132, 133, 134 and 135 should be stricken from evidence and all testimony relating thereto should be struck from the record.

Respectfully submitted,

WINTHROP, STIMSON, PUTNAM & ROBERTS
Attorneys for Defendant,
The Singer Company
40 Wall Street
New York, N.Y. 10005
Telephone: (212) WH 3-0700

Dated: New York, New York
May 1, 1974

Of Counsel:
Terence H. Benbow
Jonahtam K. Lagemann

Principles of Introduction of Machine Prepared Studies *

Editor's note: This is a report of the Subcommittee on Data Processing of the Committee on Agency Ratemaking of the Section of Administrative Law of the American Bar Association.

INTRODUCTION

The use of data processing machines by business enterprises, large and small, is commonplace. So too, the use of such machines by agencies of the Government is steadily increasing. Such machines render possible the production of studies of breadth and depth that would, as a practical matter, be impossible to achieve without them. Hence, such machines are a valuable means of developing the data and facts needed by regulatory agencies in the administration of regulatory statutes.

The purpose of this report is to set forth the general principles upon which there can be framed rules of procedure and evidence in rate proceedings before regulatory agencies that will enable the fullest use of data and facts produced with the aid of machines and at the same time assure all parties of such proceedings and the agencies a fair opportunity to probe, rebut and intelligently weigh data and facts so produced. Rules framed on these principles will necessarily vary from agency to agency as the conditions, issues and parties in rate proceedings vary from agency to agency. Rules framed on these principles will also necessarily vary from the rules evolved before the days of data processing machines and ordinarily applied by administrative agencies. However, this subcommittee of the Committee on Rate Making believes that rules framed on these principles can nonetheless adequately serve the purpose of all rules of procedure

and evidence, namely to assure all parties a fair hearing and to enable the resolution of issues of fact with both reasonable dispatch and as much certainty as is reasonably possible.

I. RIGHTS AND OBLIGATIONS OF A SPONSOR OF A STUDY BEFORE THE ADMINISTRATIVE AGENCY PREPARED WITH DATA PROCESSING MACHINES

(a) Original Records

Original records involved in extensive machine-prepared studies before Administrative Agencies may be numbered in the hundreds of thousands and can be located at numerous points [illegible] over wide geographical areas. These records may be necessary for the carrying on of the business. Sometimes it is not practical either to copy such records or to assemble the original records in one place for inspection by adversaries, much less to require their transportation to the hearing room. Generally there is no benefit to anyone in even attempting to assemble original records in one place because the quantities involved are such that a large and costly organization is required if any serious attempt is to be made to review such records.

In addition, any review of original records may involve problems of disclosing information which is prohibited by statute, and in some instances disclosure may be prohibited under security acts. In rare instances there may be problems arising under Section 3 of the Administrative Procedure Act. Substantially all major [illegible] studies involve disclosure of the proponent's business, and since the agencies generally are interested in proceedings involving competition, questions are raised as to how far [illegible] should be allowed to invade the business privacy of [illegible]. Utilities in some cases may have similar problems.

Under these circumstances, a proponent of a machine study should have both a right and a duty to observe any restrictions on disclosure imposed by statute, although generally, where [illegible] can be shown, he can be relieved from [illegible] of the statute by making disclosure [illegible] [illegible] involve a [illegible] [illegible] information [illegible] appropriate order.

INTRODUCTION OF MACHINE PREPARED STUDIES

The obvious legitimate need for any review of original documents either by the agency and/or by an adversary, is to provide reasonable assurance of the quality and a knowledge of any limitations of the original records.

Random sampling has now become an established statistical technique. See Statistical Adjustment of Data—W. E. Deming (John Wiley & Sons, Inc.—London—1948); Some Theory of Sampling—W. E. Deming (John Wiley & Sons, Inc.—London—1955); Common Sense in Sampling—C. R. Wasson (Harvard Business Review, Vol. 41, No. 1—Jan.-Feb. 1963). It is employed by the Bureau of the census and it has been recognized by the I. C. C. with the publication of a list of random numbers. Some agencies have sampling experts on their staffs competent to evaluate and criticize any samples that might be submitted to the agency or to formulate any samples that should be required by order of the agency.

It would seem that the rights and obligations of a proponent of a machine study could be satisfied by an appropriate sample of original documents (possibly selected through the use of the Interstate Commerce Commission's table of random numbers) which could be made available for inspection by representatives of the agency and any adversary. In order to satisfy statutory limitations on disclosure, it may be appropriate for the agency to publish in any rule providing for such a sample, specific authorization for disclosure.

(b) Reliability of Data

There is a crude but graphically true expression among machine men to the effect that "garbage in equals garbage out." This expression emphasizes that no machine study is any better than the quality of the input data. Thus, it is important to the proponent, as well as to the agency and any adversaries, that the quality of the input data be verified. This requires some method of determining whether the transcription of original data into a form usable on tape or cards, suitable for introduction into the computer, has been done accurately. There are several devices for checking the integrity of data, ranging from key punching verification of all or a sample of the original data, to mathematical checks, such as control totals, accumulation or zero balances checks, reconciling numbers, etc.

It would appear reasonable for the agency by rule to require the proponent of any machine study to put into the record an appropriate verification of the accuracy of the input data; to explain on the record the nature of the procedures and/or devices used to check the quality of the input data, and to provide the accuracy and any adversaries with the results of the checks made. In the event that the agency should find, either on its own motion or upon the motion of an adversary, that the checks are insufficient, the agency rule should provide the hearing officer with sufficient authority to require proponent to make and include in the record, such additional checks as reasonably may be deemed necessary.

(c) The Computer Program

Once the input data has been introduced into the computer, it will be processed according to a program or a system of logic which has been established in the computer by its operators. This program will instruct the computer as to what mathematical calculation, data aggregations or divisions, and other logical operations should be carried out on the data which has been introduced into the machine. The program will also determine the form of the output data. Obviously, the validity of the program is critical for a determination of the validity of the actual computation process. Accordingly, the proponent of a machine study should be required to set forth the following:

(1) A non-technical written exposition of the processes and logic employed to produce the evidence in question, sufficiently elaborate to permit a lawyer to understand the analytical reasoning underlying the process.

(2) A non-technical explanation in writing with illustrations of the controls built in to the process and those maintained to secure accuracy and completeness.

Logically, consideration by both the agency and the parties in the proceeding of a machine study, would be materially facilitated if the proponent of the study would make available in addition the following:

(1) A system flow chart (in standard symbols) showing all data flow and its sequence.

(2) A program flow chart (in standard symbols) reflecting all the processes involved—this is sometimes also known as a logic block diagram. Wiring diagrams, if any were employed, should also be shown in this category.

(3) Samples of cards and tape record layouts.

The Committee also believes that every proponent of a machine study should have available at the meeting the following:

(1) A listing of the program in whatever language was employed—sometimes called listing of [illegible] symbolic program.

(2) A listing of the object program in the machine language employed.

(3) The test deck that was used in conjunction with the object deck. This would permit verification of the object deck's integrity. It will also make it possible for them to reproduce the computational process, provided that the input data is furnished to them in the form of punch cards or tape.

(d) Verification of Machine Operation

Most manufacturers of machines provide the user with recognized and specific procedures or techniques for verifying that the machine is in proper operating condition at the time the evidence was processed. At the request of any party, proponent should make available a statement identifying the make and model of the machine used and setting forth the kind of verification procedures or techniques used, and if any abnormality in machine operation is disclosed by such verification, the extent and nature of such abnormality.

(e) Form in Which Data Should Be Submitted to the Agency

Proponent of a machine study should be required to submit the study in two forms: (1) a summary of the study should be submitted in exhibit form in language that can be understood by laymen (the term "language" to include [illegible] or tabulation [illegible]). The exhibit should be accompanied by written or oral testimony which will make the exhibit understandable without recourse or reference to codes or other ma-

chine languages or characterizations. This exhibit and testimony should be incorporated in the record of the case; (2) a copy of a complete machine printout in appropriate machine language should be provided to the agency and there made available to adversary parties.

This printout may be shown in coded form wherever codes have been assigned to various categories for ease in processing, and does not necessarily require decoding to the English language. Unless there is specific reason therefor, this printout should not be incorporated in the record since it would serve no useful purpose on appeal.

In addition, proponent of the machine study should be required to make available a deck of cards or magnetic tapes containing all the data used in the machine study, which upon request will be supplied to the agency's staff or to adversary parties as working papers. The cards and magnetic tapes should not be included in the record, since there is no practical way in which these work papers could be employed in a case on appeal.

(7) Degree of Competency Required of Witnesses Supporting a Study

The proponent of a machine study should be required to supply a witness fully qualified and capable of explaining in detail the logic of the programming or messaging of the study and the evidence used to verify the machine output. These factors should be within the witness's personal knowledge or the activity should have been carried on under his direct supervision and direction.

It might be desirable, in order to cover unusual situations, that the examiner's rules applicable to machine prepared studies specifically authorize the examiner, upon a showing of good and sufficient reason, to require the proponent of a machine study to produce a witness to cover any particular phase of the study that is within the competency of the witness described above.

II. THE ROLE OF THE AGENCY

Some agencies are equipping themselves with both the personnel and machines capable of fully analyzing data processed by machines. As noted above, it is suggested that the agency's

INTRODUCTION OF MACHINE PREPARED STUDIES

rules governing the introduction of machine studies provide that proponent of the study submit to the agency decks of cards, magnetic tapes, and programming and messaging instructions which would permit the agency to reproduce the study with a minimum of expense. However, there are different machine languages, and it is possible that a proponent's study could not be processed on the agency's machines. Under these circumstances, it would seem reasonable that the agency by rule should require the proponent of the study to perform for the agency at no cost to the agency, whatever machine work the agency's staff might deem necessary to appraise the study if the machine language used in the study is incompatible with the agency's machines. Presumably this problem is a transient one, since there are being perfected universal languages which permit translation from one machine language to another.

Since most of the rate litigation before the agencies involves competing carriers and/or large corporate interests, all of whom will have the capability, either on their own machines or through contract with a machine servicing agency, to verify and process machine studies, there is probably little need for agency activity in this area to protect the interest of any of the litigating parties. But where the public interest dictates, the agency should have the capability to effectively deal with studies of this nature. Furthermore, staff review of studies of this kind would seem to be desirable to permit the agency to keep itself informed, particularly in matters of national importance. Studies of this kind frequently are helpful in advancing the research work which the agencies' staffs from time to time perform.

It is probable that the agencies do not need to independently verify or check the original records for basic input data apart from the sampling process suggested in the discussion of these items under "1" above. In any event, this area should not create undue problems, since the agencies generally have full authority to require the businesses subject to its regulations to submit special and periodical reports. Since the agencies generally have adequate statutory power and have provided in their rules for the necessary implementing procedures, no additional record rules would seem to be required with respect to reports required to verify these data.

7

[R 185]

III. THE RIGHTS AND OBLIGATIONS OF ADVERSARY PARTIES

In view of the fact that the adversary party will have available ample verification of the original records and cards or tapes containing all of the basic information in the study, together with a full and detailed explanation of the programming and concepts of the study, cross-examination in these areas should be limited to matters that cannot reasonably be established by the adversary's own witnesses.

Adversary parties, of course, should have a right of cross-examination with respect to the witnesses submitted by the proponent in support of the logic of the study. However, wherever possible, adversaries should be afforded access to work sheets and be afforded the right of informal conference with proponent's personnel preparing the study as a substitute for formal cross-examination. In this fashion, the rights of the adversaries can be protected without undue expenditure of hearing time, unduly burdening the record, increasing the costs of the proceeding and delaying the decisional process.

Adversaries should have an obligation to supply to proponent, with respect to any machine reading of proponent's study, the same type of material and data that they receive from proponent with respect to the original study. Similarly, adversaries should be required to submit the same type of material [illegible] to the agency. Except upon good and sufficient cause shown, such materials and data should not be included in the record but should be considered work papers and fall within the [illegible]. Adversaries submitting criticisms or exhibits [illegible] study should be required to submit a witness to testify with respect to the logic of the re-[illegible] and should be subject to cross-examination there-[illegible] changes are made in proponent's underlying logic in-[illegible], such changes in the form of omissions or additions [illegible] should be subject to [illegible] and the same [illegible].

[illegible], adversaries should have the same rights and obli-[illegible] to any study submitted as is cast [illegible] in making the original study.

[illegible] have discovery rights. Any reference to the [illegible] study by certain data in addition to those included [illegible] proponent should be required to provide such

data under the existing discovery rules, if it cannot be obtained under voluntary agreement between the parties. There would seem to be no reason why any proposed procedural rules applicable to machine studies should attempt to deal with this problem.

By the Subcommittee:
Robert D. Brooks
A. L. Corbin
Theodore N. Forbes, Jr.
George F. Galland
Richard L. Perry
Bryce Rea, Jr.
John Rogers
Wm. Warfield Ross
Mrs. Edith H. Smith

Separate Statement of Member George E. Ashley appended.

Data Processing Consultants:
Peter James
Stanley Kimmel
W. L. McFarland

SEPARATE STATEMENT OF GEORGE E. ASHLEY

I believe the report of the subcommittee under the able leadership of its Chairman will be very useful to practitioners and hearing officers who have to deal with machine-processed material in rate proceedings. As a guide to our thinking in this area I think it is very worthwhile. Nevertheless, I would like to have my view noted that I do not believe it is necessary, or even desirable, for agencies to promulgate detailed, formal rules for the handling of machine-processed material, at least at this time.

Rate cases of a scope which make the utilization of machine-processed material feasible have always presented typical problems in the handling of statistical and summary evidence. The evidentiary principles applicable to machine-produced studies should be no different than those applicable to manually produced studies. The only thing that has changed is the *physical form* of the work papers. This may present certain mechanical problems for regulators or opponents who wish to check the

accuracy of the results and prepare [illegible] These, it [illegible] to me, can best be handled on a case-by-case [illegible]. The [illegible] of a machine code should not be permitted, of course, [illegible] adequate checks and precaution for [illegible] putting data in machine form. But I fail to see the necessity for elaborate rules in this area. Able hearing examiners should be able to deal with these matters in specific cases more practically and intelligently than can be done by agency rule.

Even though it may ultimately be desirable to standardize procedure, I believe it is premature to do so now. Formal rules of universal application now may very well prevent our gaining valuable experience which would make possible the framing of more satisfactory rules later on.

OPINION DATED APRIL 11, 1975 OF DUFFY, J.,
WITH APPENDICES "A" AND "B" (R 132)

APR 11 2 08 PM '75
S.D. OF N.Y.

UNITED STATES DISTRICT COURT
SOUTHERN DISTRICT OF NEW YORK

PERMA RESEARCH & DEVELOPMENT COMPANY,

Plaintiff,

-against-

THE SINGER COMPANY,

Defendant.

#42235

OPINION

66 Civ. 665 KTD

APPEARANCES:

POLETTI FREIDIN PRASHKER FELDMAN & GARTNER, ESQS.
Attorneys for Plaintiff
By: Paul R. Grand, Esq.
Paul DeRensis, Esq.
Of Counsel

WINTHROP, STIMSON, PUTNAM & ROBERTS, ESQS.
Attorneys for Defendant
By: Terence H. Benbow, Esq.
Elizabeth M. Taylor, Esq.
Eugene G. McGuire, Esq.
Jonathan K. Lagemann, Esq.
Rebecca H. Rawson, Esq.
Of Counsel

KEVIN THOMAS DUFFY, D.J.

This case has had a long and tortured history. It was instituted on March 9, 1966, and the operative facts go back several years prior to that time. The trial spanned eight months and included many thousands of pages of exhibits.

Basically, it is a breach of contract action, plaintiff and defendant having entered into two contracts, one on June 18, 1964, the other on December 21, 1964. By judicial curtailment of the issues, only the breach of the December 21, 1964 contract was the subject of the trial but in order to put into perspective all of the claims, counterclaims and defenses of the parties it is necessary to review the negotiations leading to the June 18, 1964 contract, the relationship of the parties while operating thereunder, and particularly the knowledge gained by the defendant during the period starting with the negotiations leading to the June 18, 1964 contract and ending with the December 21, 1964 contract; and also the performance by the defendant under the December 21, 1964 contract.

Both contracts[1/] involve an anti-skid device for automobiles invented by the president of the plaintiff, Frank Perrino (hereinafter "Perrino"); patented by him and the patents assigned first to the plaintiff corporation and thereafter pursuant to the December 21, 1964 contract to the defendant. It should be remembered that anti-skid devices for automobiles were not generally marketed prior to 1964, and that there is no attack whatsoever on the patents which underlie this suit.

This action started as one to set aside the December 21, 1964 contract and to enforce certain provisions of the June 18, 1964 contract. That complaint was dismissed by Judge Frederick vanPelt Bryan of this Court except that Judge Bryan found that a cause of action lay in the "Wherefore" clause of the complaint that the defendant may have not used its "best efforts to market and manufacture" the invention assigned to it under the December 21, 1964 contract. Civil No. 66-665 (S.D.N.Y., filed March 29, 1968), aff'd 417 F.2d 572 (2d Cir. 1969).

Thereafter, Judge MacMahon of this Court, in denying another motion for summary judgment, further delineated the issue of "best efforts" as follows:

> " . . . we think that 'best efforts' here means that Singer was required to continue collaborating with Perma for a reasonable length of time in a good faith effort to solve the problems then preventing marketing of the product."
>
> * * * *
>
> "For example: (1) Did Singer use its best efforts for a reasonable time . . . to perfect the product under all the circumstances? (2) In view of the fact that the device was not 'fail-safe,' was Singer justified in

> abandoning the contract either because it was impossible to make the device 'fail safe' or because it could not be made 'fail safe' without unreasonable, unwarranted or impractical efforts and expenditures of time and money out of all proportion to engineering and economic realities?" 308 F. Supp. 743, 748-49 (S.D.N.Y. 1970)

While I defined the issues at the start of trial in a somewhat similar manner to that of Judge MacMahon, I permitted extraordinary latitude to the defense to prove all that it could and to make any arguments it wished as to its defenses and its counterclaim. Since the case was tried without a jury I permitted certain evidence to be received which is of questionable probative value. All of this was done with a view that this trial would mark an end to this litigation.

In summary, I find for the plaintiff on the claim that was tried. I also find that the counterclaim advanced by defendant was totally sham as a matter of fact.

This opinion is to be considered findings and conclusions as required by Rule 52 of the Federal Rules of Civil Procedure.

I.

BACKGROUND OF THE PARTIES

Frank Perrino, although a person without formal engineering training, has been a "tinkerer" all his adult life. After being discharged from the Air Force, where he received training as an airplane mechanic, he returned to his native New England where he invented an accelerator brake and filed for a patent in 1959. An anti-skid control was part of this accelerator brake patent application. In 1962, a separate patent application was filed for the anti-skid invention. Thereafter, the anti-skid was separated into five patent applications representing different aspects of the device. These applications matured into five separate patents between 1966 and 1969 after the assignment of them to the defendant.

Perrino founded the plaintiff corporation, Perma Research & Development Company (hereinafter "Perma") under Delaware law and has been its president at all relevant times. Perma has its principal place of business in North Attleboro, Mass.

The Singer Company (hereinafter "Singer") is a New Jersey corporation with its headquarters in Rockefeller Center, New York, N. Y. While originally started as a manufacturer of sewing machines, it has become a widely diversific

[R 132]

manufacturing concern. The 1965 annual report for the Singer Corporation shows sales of $980 million from manufacturing and sale of heating and air conditioning equipment, technical products, business machines and computers, and a variety of other devices, of course including sewing machines. During 1965 alone, Singer spent $18 million on its various research and development activities.

Both parties acknowledge that this Court has jurisdiction over this action based on diversity of citizenship. 28 U.S.C. § 1332.

II.

BACKGROUND TO THE NEGOTIATIONS LEADING TO THE JUNE 18, 1964 CONTRACT.

After the invention of the accelerator brake and the recognition that the anti-skid control could be separated from it, Perrino tried to interest various people in the automotive industry in the devices. Of particular note is the fact that he took the anti-skid device to the Bendix Corporation in 1960, where it was considered by Stanley I. MacDuff, who tested it once by driving it home and who recommended that Bendix decline any interest in the device. (As we will see later, this was the same Stanley I. MacDuff whom the defendant Singer employed as an expert when

it became apparent that this case would go to trial and who was permitted to give "expert" testimony at trial.) Perrino, on behalf of Perma, was apparently unable to interest anyone in the anti-skid device but continued working on it at North Attleboro, Mass.

Perma also arranged to have tests made of its anti-skid device by certain automotive companies and by the Motor Vehicle Research of New Hampshire (hereinafter "M.V.R.N.H."), apparently a private organization owned by one Andrew White. M.V.R.N.H. agreed to do the testing for a portion of the capital stock of Perma and White became a member of the Board of Directors of Perma. M.V.R.N.H., thereafter, issued a glowing report on the Perma anti-skid device. Much of the report, however, only hints at conclusions and little firm test data is contained therein. Armed with this report and a promotional film, Perrino, on behalf of Perma, set out again to sell some manufacturer on the anti-skid control device. Apparently this effort was again unsuccessful although Perma had put together a number of hand-tooled, hand-finished prototypes.

Apparently in late 1963 or early 1964, Perma had arranged for a distribution agreement of the anti-skid device with a small number of automotive equipment distributors and new car dealers and had entered into a contract for

the manufacture of the device by the Worcester Stamp Metal Company of Worcester, Mass., which in turn had sub-contracted with others for the manufacture and assembly of some of the components of the device.

Perma, through Perrino, continued to try to interest safety officials, highway patrols, insurance companies and others in the device. Apparently some officials of the Singer Company (Canada) Ltd. saw the promotional film, the M.V.R.N.H. bulletin and advised the management of the Elizabeth, N. J., Singer plant of the device.

During the period of the early 1960s, imports of cheaper sewing machines (particularly Japanese made models) had cut into Singer's share of the sewing machine market. Singer had already started to diversify its product line and yet much of Singer's Elizabeth plant, which had been engaged principally in the manufacture of sewing machines, stood idle.

III.

THE NEGOTIATIONS FOR THE JUNE 18, 1964 CONTRACT

In February 1964, representatives of Singer's Elizabeth, N. J., plant travelled to North Attleboro, Mass., to meet with Perrino and other representatives of Perma. Perrino apparently told the Singer people at that time that the Perma anti-skid device was "fail-safe" (or in plaintiff's

version, "had fail-safe features") and "that in case of a failure, that the car would revert back to its normal braking". The Singer representatives were also assured that in the event of some internal failure "the unit in effect deactivated and reverted back to the original brake system on the car". The Singer people were also shown the Perma promotional film which stated "The Perma anti-skid control . . . includes a fail-safe feature which will automatically revert to the standard braking system in case of failure." These statements or ones similar to them allegedly were reiterated by Perma officials in the months leading to the June contract.

Similarly, Singer was told that the device was "perfected" and that Perma had "had testing done by an independent laboratory." In connection with this latter assertion Perma supplied the Singer officials with copies of the M.V.R.N.H. report.

It is on the basis of these asserted "false misrepresentations" that the defendant asserts its counterclaim and its affirmative defense since the device was neither perfected nor fail-safe.

At the initial meeting in North Attleboro, the Singer personnel present were Messrs. Kloby, Morris and Sprague. Kloby was to be the man in charge of the Perma

[R 132]

anti-skid program for Singer. He admitted that he had no background in engineering. Morris at the time was the assistant general manager of the Elizabeth facility and after June 1964, became the general manager of the facility. Sprague was the chief engineer of the Elizabeth plant. Each was a witness to a demonstration of the Perma product at this February meeting. First a Perma employee drove a car equipped with the anti-skid device on a test track behind the Perma offices. Then the representatives of Singer were given a demonstration ride in a car equipped with a Perma anti-skid device over country roads. A number of stops were made under panic conditions. Some of these were made while the car was driven with two wheels on dry road and the other two on the wet, snow-covered shoulder.

Singer had immediately after the initial meeting in February been given a set of plans and specifications, along with three anti-skid controls and a cutaway of the device. These were necessary for Singer to work out the cost to build the anti-skid control. In return, the Singer officials left with Perma a brochure which was boastful about the engineering and quality control expertise of Singer.

While it is clear that Singer sought out Perma to beef up production in its Elizabeth, N.J., plant, it is similarly clear that Perma was anxious to have Singer take

over the manufacturing of its anti-skid device since the Worcester Stamped Metal plant was on strike and Perma was dissatisfied with the quality control of the units being delivered by Worcester.

Prior to signing the June 18, 1964 contract, [illegible]no and his cohorts from Perma visited the Elizabeth plant and displayed to the top Singer officials the entire device with all of its components spread out on conference tables. The promotional film was shown and the M.V.R.N.H. report was distributed. Among the many Singer representatives present at the presentation were the top officials of the Elizabeth plant along with the top engineers assigned to that facility. This fact becomes important as we will see because one of the "experts" who testified on behalf of the defendant at trial indicated that any engineer worth his salt would, on inspection, have rejected the Perma device as totally unmarketable. I must assume that this was a damning of the Singer engineering capabilities, which is a strange defense and one which I will not rule on.

[R 132]

IV.

THE JUNE 18, 1964 CONTRACT AND THE EXPERIENCE OF THE PARTIES THEREUNDER

On June 18, 1964, the parties entered into a Patent Licensing Agreement by which Perma granted Singer the exclusive right to manufacture the device in the United States. In order to oust the Worcester Stamped Metal Company, Singer agreed to buy the inventory then being held by Worcester. This cost over a million dollars.

It is undisputed that, after the Elizabeth plant acquired the inventory and started production, many defects were found in the mass-produced device. During this period from mid June to December 1964, officials from Perma visited the Elizabeth plant quite often and the parties redesigned a number of the components of the device, including many of the so-called "fail-safe features".

Rather than attempt to describe the entire device, I am appending hereto a copy of one of the patents which most fully discloses its configuration and operation. (Appendix A) From this the reader should note that anti-skid control consists of a flexible cable attached to the speedometer cable, which drives a set of weights in the sensor; the weights spin in a centrifugal fashion which, when suddenly slowed or stopped, collapse in such a fashion on one side

to force a cam gear to actuate a micro switch which permits electricity to pull back a solenoid on the other side of the sensor; which in turn permits a rotary valve to introduce vacuum into the system. This vacuum draws back a diaphragm in the "Perma-Vac", which in turn pulls back a plunger which takes hydraulic fluid from the brake system and thus relieves pressure on the brakes. A pressure switch is included in the device at this point so that when pressure is reduced the electricity flowing to the solenoid is cut off and the vacuum stopped at the diaphragm, thus permitting full brake pressure to be exerted. In this manner the brakes are "pumped" in a "panic stop", thus lessening the chance for a locked wheel skid.

During the period of June through December 1961, the pressure switch was redesigned with Singer's chief engineer on the project so deeply involved in the redesign that he made some of the parts by himself in the tool room at the Elizabeth plant.

Similarly, it was discovered that the cam gear which activated the micro switch was not operating properly. Singer's chief engineer on the project concluded that this feature was "marginal" and suggested that it be redesigned. Instead, a temporary solution was worked out whereby the cam gear was polished.

[R 132]

Other difficulties with the device were recognized by the Singer staff. They noted that the sensing unit could become packed with contaminents in ordinary usage; that the rotary valve could and did "bind" on occasion; and that the Perma-Vac spring should be strengthened.

On September 17, 1964, Singer's chief project engineer confided his fears about the reliability of the anti-skid control to management in a memorandum which reads in part:

> "I am deeply concerned about the reliability of this device in general. My cause for alarm stems from the fact that the performance testing does not detect some defects which could cause malfunction of the unit during operation on a car . . . I feel it would be advisable to get a detailed specification from Perma listing all the possible causes for failure so we may incorporate tests to detect deficiencies before sending units out of the plant. I strongly recommend that the legal aspects of responsibilities be thoroughly investigated so that we may be fully covered for what is sold before the confidence level is determined to be satisfactory."

[R 132]

Whether, in fact, Singer asked Perma for such "detailed specification" is unclear but it is clear that none was forthcoming.

During the period from June through December 1964, Singer conducted a number of tests on the anti-skid controls that it was producing. These were done on test stands acquired from Perma. A device was also installed on a Singer vehicle. These tests, however, were not exhaustive, but that was a choice by Singer management and in no way now bolsters its counterclaim and affirmative defense.

Because of the problems recognized by Singer, few of the anti-skid controls were marketed prior to the December contract, thus leaving Perma financially distressed. Both parties recognized the need for further engineering on the device and this situation led to the negotiations for the December 21, 1964 contract.

V.

NEGOTIATIONS FOR DECEMBER 21, 1964 CONTRACT BETWEEN THE PARTIES

The exact genesis of the negotiations leading to the December 21, 1964 contract between the parties is unclear but it is clear that Perma entered the negotiations with a negative balance sheet and the recognition that it

[R 132]]

could not perfect the anti-skid device for market on its own. Singer offered to Perma its engineering skills and purported expertise.

But, before entering the December 21, 1964 contract, Singer, although it had done its own marketing surveys and had seen Perma's estimates, commissioned William E. Hill & Co., Inc. to do another market survey. The report of the Hill organization delivered to Singer management at least a week prior to the December 21, 1964 contract with Perma totally demolishes the counterclaim and affirmative defense advanced by Singer. It so dramatically proves that the management of Singer could not have relied on any alleged false representation by Perma that it is set forth in full in Appendix B hereto.2/

Among the "Principal findings and conclusions" of the report are the following:

> "The Perma antiskid control falls short of meeting requirements of automotive engineers and does not provide the improvement possible in theory. The consensus of many engineering tests that have been run on the unit indicate that the Perma control, as compared to a panic or locked wheel stop, gives improved steering control but requires a greater stopping distance

to come to a complete stop. The automotive brake and safety engineers who have reviewed its performance do not agree on the value of the Perma anti-skid control . . . "

* * * *

"The General Motors Research Center, the Ford Advanced Design Group and the Chrysler Brake Laboratory are against use of the control."

* * * *

"Based on evaluation by major automobile manufacturers the Perma anti-skid control does not meet established requirements."

In an appendix to the Hill report is a summary of the results of tests which representatives of Singer, at trial, claimed were concealed from Singer by Perma prior to the December 21, 1964 contract. Apparently this claim has now been abandoned.

Singer, however, still presses its claim that Perma falsely misrepresented that the device was "fail-safe" and that it was fully "perfected" and "tested" and that Singer relied upon these representations in entering the December 12, 1964 contract. I hold as a matter of fact that there was no such reliance. Without reliance any

[R 132]

misrepresentation is not cognizable at law either as a counterclaim or as an affirmative defense. In the situation presented only an ostrich could make the claim defendant does. It is clear to me that both the counterclaim and the affirmative defense raised by Singer are sham.

VI.

THE DECEMBER 21, 1964 CONTRACT BETWEEN THE PARTIES

On December 21, 1964, the parties entered into a contract whereby Perma assigned its patent applications to Singer. It is clear that the parties knew at that time that the anti-skid device was not fully perfected and that Singer would have to do work to make the device a marketable one. In consideration for the assignment of these rights Singer paid off all the outstanding debts of Perma and agreed to pay royalties on each Perma anti-skid control marketed. No minimum royalty was agreed to in the contract, a somewhat unusual arrangement.

It is true that both parties to the contract were looking for the anti-skid control to be quickly marketed, for both had expectations of deriving profits from it, but these expectations do not give credence to Singer's argument that the contract did not call for any engineering work by Singer on the device. That promised engineering work is the

total foundation upon which the December 21, 1964 contract is based. It is true that the expected engineering work is not spelled out in the contract. And it is for that reason that we must consider whether Singer made its best efforts in collaboration with Perma for a reasonable length of time in a good faith effort to solve the problems then preventing the marketing of the product.

In this connection it must be noted that the December 21, 1964 assignment of Perma's patent rights to Singer was accompanied by a Technical Services Contract of the same date. This Technical Services Contract required Perma to collaborate with Singer in any engineering efforts which Singer required the inventor to do to make the device marketable. The very existence of the Technical Services Contract gives the lie to Singer's contention that no further engineering work was contemplated by the parties as of December 21, 1964, the date they entered the patent assignment contract.

VII.

SINGER'S PERFORMANCE UNDER THE CONTRACT

To properly evaluate Singer's performance under the patent assignment contract it is necessary to look first at Singer's capability. In 1965, Singer had 15 research and development laboratories and employed more than

2,200 scientists, engineers and technicians. Singer's net earnings in 1965 were $44 million.

Singer chose to leave in charge of the Perma project after December 12, 1964, those who had worked on production under the prior June contract: Robert Kloby and Albert Romel. Kloby was given the title Manager, Perma Anti- Program. His education and experience were concentrated in marketing, market evaluations and sales projections. He had no engineering background whatsoever. Albert Romel was an engineer graduated from the Newark College of Engineering in June 1964, which he attended while working for Singer at the Elizabeth plant. Virtually for his entire adult life Romel had been employed at the Elizabeth plant where he had been engaged in the manufacture of sewing machines. Prior to working on the Perma device, he had no employment experience in automotive or brake industries. Until he started to work on the Perma device he had never worked on brake systems.

Both Kloby and Romel testified at trial. Romel, the engineer in charge assigned to the project by Singer, took 22 minutes on the witness stand to compute the relative proportion of one circle to another after being given pencil and paper and the relevant equations which require merely squaring one number. At the point this exercise was called

for, Romel had been on the stand for a number of days. He did not appear nervous. Yet his computations were totally wrong. The history of the project shows that Romel was not an innovator but merely followed his instructions. He testified that although he had worked on the Perma device starting in June 1964, and had been exposed to it in February 1964, he had not analyzed the invention prior to the contract of December 21, 1964.

Romel's staff consisted of three graduate engineers, one engineering student and various others who were given grandiose titles which seem to have been invented solely for this litigation. One engineer from Singer's Denville research laboratory was also assigned to the project for a period of about one month.

Kloby and Romel were under orders to keep expenses down. The manager of the Elizabeth plant received a memorandum from corporate headquarters dated January 7, 1965, which stated in part:

> "It is of the utmost importance that we spend no additional moneys and génerate cash flow as quickly as possible . . . "

To this the following response was made:

> "Every additional expenditure for the Perma product line is being scrutinized thoroughly by this office. No additional moneys are being

spent unless absolutely necessary in order to control our total investment."

One Singer official estimated that during the year 1965, the project cost $190,000 including salaries of all assigned to the project, allocation of normal expenses to run the Elizabeth plant, etc. This figure appears inflated although Singer at trial tried to prove an even more bloated figure. In this attempt the witnesses for the defendant contradicted themselves and each other in many respects. For example, Kloby testified that in September 1965, he was removed from the Perma project and returned to "Forward Planning" at the Elizabeth plant; yet his salary for the entire year is attributed to the Perma project.

In any event, it is clear that Singer gave inadequate funding to the entire program and staffed it with inept and inexperienced people who were unable to even understand the problems, much less cope with them. At one point Singer advertised for an automotive engineer who specialized in brake systems. He was not hired.

Shortly after undertaking the December 21, 1964 contract, Singer attempted to set up "liaison" with automotive and brake manufacturers. This consisted of one trip for Kloby and Romel to the Detroit area early in 1965, and

conversations with various people there. It is astounding that Kelsey-Hayes, a well-known brake manufacturer, at that time offered to analyze and do tests on the device, (apparently without cost to Singer) but that the offer was rejected out of hand, at least until Singer recognized that this litigation was impending.

In March 1965, Singer received from E. I. duPont deNemours & Co. (hereinafter "duPont") an analysis of a 1963 vintage Perma device. This analysis set forth a number of potential failure modes in the device which could cause an unsafe condition and loss of brakes. No independent analysis of the device was made at this time by Singer. Romel thereafter concentrated the efforts of his staff in attempting to resolve the problems posed by the duPont report and those obviously required by the changes made in braking systems introduced by the automotive manufacturers.

Some of the 1965 model automobiles had for the first time self-adjusting brakes and disc brakes. For the Perma device to work with these new features required greater fluid displacement and higher hydraulic pressure. Pursuant to the Technical Services Contract, Perma proposed to change the device by changing the piston bore and the spring in the Perma-Vac. This, however, would have rendered worthless much of Singer's inventory and in February 1965,

Perrino, at Romel's direction, designed a transfer valve whereby vacuum would be introduced to the front of the Perma-Vac diaphragm to assist in pumping the brakes. The device thus became totally vacuum dependent with this change and introduced more failure modes into its operation. If there was a loss of vacuum for any reason (e.g. an engine stall), the brakes might not be fully reapplied.

In order to meet the demands of the new braking systems Singer also experimented with a "restrictor valve" which was devised by Romel and those working for him. The "restrictor valve" is a simple device which permits hydraulic fluid to run more freely in one direction than in the other. It appears that there are serious questions as to the efficacy of this addition and these questions are of real substance.

It is clear to me that Romel and his staff did not have a full understanding of the dynamics of the device or of an automobile to which it was to be attached.

Romel tested various models of the Perma Anti-Skid throughout the period from June 1964 through December 1965, on test stands basically supplied by Perma at the Elizabeth Singer plant. He also arranged for road tests at the Linden, N.J., airport.

It is of some interest that the officials of Singer spurred Perrino and the other officials of Perma

during most of the period after the December 21, 1964 contract. While the Perma people were at the Elizabeth plant, conferring with Singer at least two or three times a week under the June 18, 1964 contract, this liaison almost totally ceased after Singer entered the December 21, 1964 contract even though under the Technical Services Contract Perrino and Perma remained obligated (at no extra cost) to confer with Singer about the development of the anti-skid unit. When the Technical Services contract expired it was not renewed but thereafter Perrino continued to make technical suggestions to Singer.

In June 1965, Singer through Romel and his staff were conducting road tests on the Perma device. These tests were conducted on a completed but unused section of Interstate Highway 295.

VIII.

SINGER'S DECISION TO ABANDON THE CONTRACT

At about this time, corporate politics inside Singer called for a shakeup in management. Apparently there had also been some grumbling from corporate headquarters about the non-profitability of the Perma project. Finally, Alfred DiScipio was named as corporate vice-president in

charge of Consumer Products. Among the many product lines under Mr. DiScipio's direction was the Perma Anti-Skid Device program.

DiScipio, with some of his staff, visited the Elizabeth plant to review production of all product lines manufactured there. In connection with the review the group from corporate headquarters went to view the road tests of the Perma device being conducted at the Interstate Highway.

A car was driven down the highway and subjected to a "panic" stop, first with the Perma device inactivated and then allegedly twice with the anti-skid control in operation. On all three runs the car swerved and skidded dangerously out of control.

DiScipio and his group immediately got into their own vehicles and drove away, surprisingly without even checking to see if the anti-skid had been operative or ascertaining what caused its failure.

At a meeting following the abortive demonstration, DiScipio announced that the anti-skid control was not fail-safe. He told the group that Singer would not market a product which "could leave the purchaser . . . less safe than if he hadn't elected to purchase it . . . " It must have been as clear to DiScipio's subordinates as it was to me on trial that DiScipio was enunciating an impossible standard

yet apparently none of his subordinates dared to question their boss. It is my belief that DiScipio had determined to get rid of the Project on the very day he first saw it demonstrated and that he communicated this decision to his subordinates although not in so many words.

In any event, a few days later DiScipio set up a "Task Force" to study the Perma project which was chaired by Burton Person, DiScipio's assistant, and, significantly, included an attorney from the staff of house counsel. Person thereafter circulated a memorandum setting out the guidelines for the work of the Task Force. The memorandum questions whether manufacturing and marketing an anti-skid device for automobiles was the type of business which was appropriate for Singer and outlined certain areas for study, including Singer's legal exposure and possible costs if the project was terminated. Technical evaluation of the device was first sought from Kloby and Romel. Romel's report dated July 22, 1965, declares "due to cost and limited personnel available, it was decided to restrict extensive experimentation to short range projects." This admission in and of itself gives a fair insight into the real efforts used by Singer under the December contract with Perma.

Within days after getting the Romel report, Person, on August 10, 1965, circulated the first report of the Task

Force. Basically, it recommended the withdrawal of the device from the market; the retrieval of units already sold and in use; the termination of distributorship contracts; and an approach to Perma to "provide flexibility for Singer in regard to divestiture". Significantly, the report also directed that all letters and strategy were to be reviewed by outside counsel to Singer. At the time of the preparation and circulation of this first report, no outside engineering evaluation of the device was considered by the Task Force although it is clear that the members of the group had at the outset contemplated getting such an evaluation from the Cornell Aeronautical Laboratories and at least from Singer's own Denville Research and Development Laboratories.

The August 10, 1965 First Report of the Task Force sounded the death knell of any real effort by Singer to perfect and market the Perma anti-skid device. Much of what occurred thereafter was merely a charade staged in contemplation of the possibility of litigation.

On August 30, 1965, Person and Singer's attorney Boriss went to North Attleboro to meet with Perrino and other representatives of Perma. Person announced that the Perma program had been stopped since the device was not "fail-safe", which he defined as being so designed and

made "so that no matter what, it must revert to the conventional braking system". Person also stated Perma had to solve the problems.

On September 9, 1965, Person wrote a letter to Perrino asserting that Singer had legal claims against Perma. This letter also stated that Singer proposed "to procure the evaluation of a qualified, independent laboratory and have in fact initiated discussion with the Cornell Aeronautical Laboratory". The letter failed to state that Singer had decided against having Cornell do such an evaluation.

In fact, Person had, on September 3, 1965, requested from Singer's own Denville Research and Development Laboratory a report on whether the anti-skid device was fail-safe. The device as submitted to the Denville scientists and engineers contained the transfer valve. The Denville report as finally submitted is dated November 9, 1965. The contents of that report are extremely significant but they will be outlined below.

Meanwhile, Romel and his staff at the Elizabeth Singer plant kept searching for a quick solution to the problems of the anti-skid device. I can characterize these efforts only as being abysmally inept. The proposals generally ignored fundamental engineering concepts. For example, to minimize hysteresis (sticking) in the rotary

valve, Romel experimented with a larger rotary valve, thus increasing the area where friction would occur with concommitant aggravation of the fundamental sticking problem.

At the same time, Perrino had also attacked the "fail-safe" problem and by early November had come up with a set of proposals including a bleeder hole to the back of the Perma-Vac which would restore brakes if vacuum was present longer than a pre-determined time; a variable displacement piston to increase output pressure; and a vacuum time delay device which would turn off the device after a pre-determined time. Perrino called the last proposal a fail-safe for the fail-safe.

On November 4, 1965, Perrino called Person and gave him a brief description of his proposals and agreed to send him a schematic of the devices. He also called Romel and described the proposals to him and likewise agreed to send Romel a schematic.

Without seeing the drawings, Romel, in a conversation with Person, stated his opinion that the proposals advanced by Perrino would not work.

Romel did not get the drawings until November 10, 1965, although Person, who could not judge the devices on his own, did receive the schematics on November 9, 1965. On November 9, 1965, Person also received the report of the

engineering analysis from Singer's Denville Research and Development Laboratory. This report described the work by Singer at Elizabeth as "modest", and concluded that the device was not fail-safe because of its vacuum dependence caused by the transfer valve (induced by Romel to save inventory). The report further stated that a redesign program estimated to cost $30,000 could overcome this problem. The defendant did nothing to implement this proposed redesign program.

On the same day as Person received the Denville report and Perrino's proposal, he submitted a Task Force report to DiScipio which formally recommended the divestiture of the Perma program. That night DiScipio and Person met and DiScipio orally agreed to the divestiture. Two days later, DiScipio gave formal approval to the Task Force Report but noted that a reserve of $2,000,000 should be set up instead of the $1,500,000 recommended in the report.

Person then set up a meeting with Perrino on November 22, 1965, in Providence, R.I. There he handed Perrino a letter dated the same day which basically rejected Perrino's ideas to make the anti-skid device more "fail-safe". Person, when questioned about Singer's real purpose, told Perrino, "Very bluntly, Frank, we do not want to be in the brake business -- our people at Elizabethport should not

have gotten into the brake business." Person tried to get Perrino to change the December 21, 1964 contract but Perrino refused and threatened to bring this lawsuit.

After the November 22, 1965 meeting, this litigation loomed and nothing much of what was done by Singer is of much import. Of course, Singer tried to cut its losses by attempting to sell the device. For some reason, perhaps as an attempt to cloak what Singer recognized was a breach of its contractual obligations, Romel continued working on the Perma project with his curtailed staff. He spent most of his time until January 26, 1966, prototyping the device for new model cars, i.e., measuring the lengths of vacuum hose, speedometer cable, etc., for the changed models.

On January 26, 1966, Singer finally abandoned all pretense and abandoned any effort to perfect the device.

IX.

THE COUNTERCLAIM AND AFFIRMATIVE DEFENSE OF FRAUDULENT MISREPRESENTATION

Although the Post Trial Brief submitted by the defendant lacks definition of exactly what it relies on in support of its counterclaim and affirmative defense,

it is clear that the claims may be broken into the following three categories: (1) perfection and testing; (2) performance; and (3) fail-safety.

Singer claims that Perma and its representatives misrepresented each of these areas in inducing the defendant to enter the December 21, 1964 contract.

Before turning to the specific allegations, it may be well to set out the elements required to prove fraudulent misrepresentation. Basically they are: (1) that material representations were made by one party to a contract; (2) which representations were false; (3) and were made with the requisite degree of scienter (or knowledge of their falsity); and (4) which were relied upon at the time of entry into the contract by the other party thereto. Daly v. Wise, 132 N.Y. 306 (1892); Becker v. Colonial Life Insurance Company, 153 App. Div. 382, 138 N.Y.S. 491 (2d Dept. 1912).

(1) Perfection and Testing

It cannot be disputed that the promotional movie shown to Singer executives at the Perma plant in February 1964 and then again at the Singer Elizabeth facility in April 1964 represented that the Perma Anti-Skid device was a "perfected, patented device". Such representations were

apparently repeated by Perrino to Romel during the period from June 1964 to December 21, 1964, the date of the contract.

Perrino, on the other hand, claims that he meant that the device was "workable, useable and marketable".

It is clear to me that the statement in the movie was mere "puffing" and was accepted as such by the executives of Singer. Singer, by its experience manufacturing and testing the device under the June 18, 1964 contract, certainly cannot claim reliance on this statement nor on the representations by Perrino. I have already detailed that changes were made in the device by Romel prior to the December 21, 1964 contract.

I find that it is totally incredible to believe that Singer relied on these statements when it entered the December 21 contract. If it had, then certainly Singer would never have entered the Technical Services Contract with Perma which looked to perfection of the device.

As to the contention that Singer considered the anti-skid device as "fully tested" and relied on the plaintiff's alleged statements to that effect in entering the December contract, we need look to only two Singer documents to give the lie to this. The first is Romel's memorandum of September 17, 1964 (set out above at page 14), which

calls for further testing. The second is the Hill Report which recites in Exhibit 1 thereto the "Results of Engineering Tests of the Perma Anti-Skid Control" where 6 out of 7 tests show that "Reliability of Unit" was not tested and where 5 out of 7 show that the device was not totally acceptable.

The lack of any scintilla of proof of reliance on the part of Singer on any of the alleged misrepresentations must doom this allegation.

(2) Performance of the Anti-Skid Device

It is interesting to note that Singer abandoned many of its claims of misrepresentation but has half-heartedly consigned to footnotes in its Post Trial Brief (pp. 6 and 17) certain allegations of fraudulent misrepresentation, the chief among which are that the device provided "shorter stopping distances" and "modulated in accordance with a graph on page 4 of Report No. 13 of Motor Vehicle Research of New Hampshire".

Again, even if these statements were made by plaintiff (which I doubt), there is positive evidence that Singer could not have relied on them. Once again, this evidence is found in the Hill Report where Exhibit 1 shows that longer stopping distances occurred with the Perma

Anti-Skid Device and that the device "cycled through this lock-roll-lock-roll condition about for times a second . . . " and thus could not be said to modulate.

In the face of the Hill Report, which was supplied to Singer management at least one week prior to entering the December 21 contract, how the defendant can claim reliance on these alleged misrepresentations is beyond my ken.

The other allegations about misrepresentation of performance are so without merit as to preclude any discussion of them in this opinion.

(3) Fail-safety

> Singer has defined "fail-safety" as follows: "We do not regard a device as failsafe unless failure of the device regardless of cause or probable frequency of a particular type of failure, does not impair the utility of the underlying system to which it is connected."

Its own expert has totally rebuffed Singer's definition of "failsafe", stating that such a standard is almost impossible of attainment. I admit that I can think of only one mechanical device which might meet this test: a wedge --

[R 132]

the simplest tool known to man. It is important to note that, according to Singer's own expert, there has never been an anti-skid system marketed in the United States that satisfied the definition of failsafe advanced by Singer.

It is uncontroverted that Perma represented to Singer that the "anti-skid" device in question had "failsafe features" which, if the device malfunctioned, would return a car equipped with the device to its underlying braking system. But to torture this into the absolute "failsafe" advocated by Singer is to warp the words used by Perma representatives and to wrench a new meaning from them heretofore unknown to semantics. I find that there was no misrepresentation by Perma in this respect.

And even if there was a misrepresentation, there was no reliance on it by Singer. During the period from June through December 1974, the personnel at the Elizabeth Singer plant encountered any number of failure modes in the Perma device. They knew on December 21, 1974 that the anti-skid control could not meet the standard now advanced by Singer.

Indeed, it appears clear to me that these issues were really a smoke screen to needlessly delay the resolution of this litigation and to harass the plaintiff and

this Court. Thus, I find the counterclaim and affirmative defense to be totally sham as a matter of fact.

X.

THE DECEMBER 21, 1964 AGREEMENT WAS A "BEST EFFORTS" CONTRACT WHICH SINGER BREACHED.

Singer contends that the contract in question was merely an assignment of patents, which contract would not require any effort on the part of the assignee to perfect the device, citing Eclipse Bicycle Co. v. Farrow, 199 U.S. 581 (1905) and other such cases.

In so doing, the defendant completely ignores the facts. This Court will not follow Singer down such a totally ignominious path.

The contract before this Court is not merely an assignment of patents. Rather, clearly implied in the contract is the intention that Singer would use its best efforts to perfect and market the device.

Though the words of the contract do not spell out this obligation, the circumstances leading to the signing of the contract mandate such an implied obligation.

See Wood v. Lucy, Lady Duff Gordon, 222 N.Y. 88, 118 N.E. 214 (1917); Eastern Electric, Inc. v. Seeburg Corp., 427 F.2d 23, 26-27 (2d Cir. 1970); 3A Corbin, Contracts § 562 (1960). It is true that Perrino testified that he "did not discuss anything about perfecting the device" at the time he entered the contract. But it is clear that the perfection and marketing of the device was the heart of the December 21, 1964 contract.

To reiterate what is said in Section V of this opinion: Perma at the time it entered the contract had a negative balance sheet with a number of large outstanding debts, since few of the anti-skid devices were sold between June and December 1964. The reason that there were so few sales was that imperfections had been discovered in the device. Singer and Perma had been working to resolve these imperfections. Singer offered its purported engineering expertise to perfect the device in return for a contract which did not even guarantee a minimum patent royalty.

Singer knew that the device was still to be perfected for why else would it have entered into the Technical Services Contract with Perma? The Singer personnel discovered all of the difficulties which prevented any meaningful sales of the device under the June contract. They knew of the problems with the anti-skid and necessarily knew that it had to be perfected.

Since the December 21, 1964 contract which Singer foisted on Perma does not disclose the efforts Singer was to expend on perfecting the device, it must be assumed that it was a "best efforts" contract, i.e., as Judge MacMahon indicated, that: "Singer use its best efforts for a reasonable time to perfect the product under all the circumstances." 308 F.Supp. at 7.

Did Singer use its "best efforts" to perfect the device? Clearly, as I set out above, its efforts were at best inept and certainly not "best efforts". There is no doubt Singer could have accepted Kelsey-Hayes' offer to analyze and test the device. It did not do so. There is no doubt that Singer could have turned the program over to its Research and Development Laboratories. It did not do so. There is no doubt that it could have hired an engineer with experience in the automotive or brake field. It did not do so.

There are any number of reasonable things which Singer could have done to perfect the device without unreasonable cost or effort. It did not do so.

Did Singer use its best efforts to perfect the Perma Anti-Skid device? It did not do so.

XI.

SINGER'S CLAIM THAT THE PERMA ANTI-SKID DEVICE WAS WORTHLESS AND COULD NOT BE PERFECTED AND MARKETED.

Singer clearly set forth in the Pre-Trial Order that it considered the Perma Anti-Skid was worthless since it could not be perfected. As part of its main case to rebut this contention, Perma offered the testimony of Daniel Goor and Andre L. DeVilliers.

Both Mr. Goor and Mr. DeVilliers were deeply involved in the development and perfection of the Kelsey-Hayes anti-skid device. Goor, although a consultant, was in charge of the project for a considerable period of time. DeVilliers was an engineer who ran a number of computer simulations on the Kelsey-Hayes device to assist in its perfection to the point that it became marketable.

Since funds were not available to plaintiff to run empirical tests of the Perma Anti-Skid Device, with alterations of the various components, the plaintiff retained DeVilliers to do computer simulations of the device with the possible changes in components. DeVilliers, using the LaGrange equations (which are readily available in standard university textbooks -- so much so that the equations were not totally foreign ground to me) produced certain computer simulations. For those unfamiliar with computers, it must be noted that in this context, simply put,

a computer is but calculators with a giant "memory" and the simulations the computer produces are but the solution to mathematical equations in a "logical" order.

On the basis of the computer simulations produced by DeVilliers, Goor testified that the Perma Anti-Skid Device could be made into a marketable product. Given the state of the art in 1964 and 1965, and even considering the electronic improvements in the anti-skid devices commercially sold today, I find as a fact that the Perma Anti-Skid Device could have been perfected and made marketable with the proper engineering work done.

To counter this evidence, the Singer company produced two main witnesses. Professor Rabins of Polytechnic Institute of New York, testified, on a theoretical plane, that the Perma Anti-Skid Device was worthless. Professor Rabins also testified that he based his opinion on a sample given to him, which sample was not even offered in evidence. Under questioning by me, he admitted that he had never seen the plans and specifications for the device nor any of the models introduced into evidence.

What Professor Rabins saw, measured and based his calculations on is totally unknown to this Court. Consequently, most of his testimony must be disregarded.

Stanley I. MacDuff also testified for the defendant Singer as an "expert". An expert witness is produced by a party to give the Court some insight into a technical area. As such, his testimony is most useful if it is impartial. An expert's testimony, like that of any other witness, can and should be tested for credibility by the trier of fact. See generally Fortunato v. Ford Motor Co., 464 F.2d 962 (2d Cir.), cert. denied, 409 U.S. 1038 (1972); Manning v. New York Telephone Co., 388 F.2d 910 (2d Cir. 1968); Scott v. Spanjer Bros., Inc., 298 F.2d 928 (2d Cir. 1962).

Stanley I. MacDuff was far from impartial and his advocacy (he is a lawyer) of his client's position was such that any statement emanating from him was immediately suspect. The suspicion of MacDuff's opinion is compounded when we realize that he, while employed by the Bendix Corporation, had totally turned down the Perma device. Not only were his views slanted by his present employment by the defendant, but they were also slanted by his prior rejection of the device on behalf of his former employer who now pays his pension.

MacDuff testified on direct that a mechanical (as opposed to an electronic) sensor on anti-skid devices made them worthless. Yet MacDuff admitted that at least one anti-skid [device] had been marketed which had a mechanical

[R 132]

sensor. MacDuff's judgment regarding the perfectibility and marketability of the Perma device becomes even more suspect when viewed in the light of his admission that he personally tried to sell to various car manufacturers a totally mechanical anti-skid device produced by a foreign subsidiary of his former employer.

Viewing all of the evidence, I am convinced that the Perma Anti-Skid control was perfectible and could have been marketed. This leads me then to the question of damages.

XII.

PERMA'S DAMAGES

Singer cites case law for the proposition that a patent assignor cannot recover for the assignee's failure to fulfill an implied "best efforts" obligation where the patented device is not commercially useful. In Kraus v. General Motors Corp., 120 F.2d 109 (2d Cir. 1941) commercial useability was actually made a part of the licensing contract. In Peck v. Shell Oil Co., 142 F.2d 141 (9th Cir. 1946), the defendant's inability to develop a marketable product constituted failure of consideration such that the licensing agreement was rendered unenforceable. The Perma

device, defendant continues, is not useful by reason of its imperfectability as a matter of engineering principle. Even if the cited cases stood for the broad proposition of law urged by the defendant, the argument would fail since I have found the device to be perfectible.

A plaintiff is entitled to the reasonable damages naturally flowing from the defendant's breach of contract. For Children, Inc. v. Graphics Int'l, Inc., 352 F. Supp. 1280 (S.D.N.Y. 1972). The measure of damages to which a plaintiff is entitled as a result of such a breach has also been described as the amount necessary to put the plaintiff in as good a position as he would have been if the defendant had abided by the contract. Hutchins v. Bethel Methodist Home, 370 F. Supp. 954 (S.D.N.Y. 1974).

Although lost profits in a new venture are not ordinarily recoverable (Cramer v. Grand Rapids Show Case Co., 223 N.Y. 63, 119 N.E. 227 (1918)), they may be awarded where: the loss of prospective profits are the direct and proximate result of the breach; profits were contemplated by the parties when they entered the contract; and there is a rational basis on which to calculate the lost profits. For Children, Inc. v. Graphics Int'l, Inc., 352 F. Supp. 1280, 1284 n.16 (S.D.N.Y. 1972); cf. Flexitized Inc. v. National Flexitized Corp., 335 F.2d 774 (2d Cir.), cert. denied, 380 U.S. 913 (1964).

In For Children, Inc. v. Graphics Int'l, Inc., supra, the plaintiff contracted with the defendant for the manufacture of books with a pop-up feature. In placing its order the plaintiff relied on defendant's expertise as a pop-up printer and designer. A large percentage of the books actually supplied to the plaintiff for marketing were defective and the plaintiff properly rejected them despite the defendant's protestations that a 15 per cent margin of error was necessary. Judge Weinfeld rejected defendant's claims since under the contract the defendant had taken responsibility for the design and engineering of the books without qualifying this responsibility with any provision for a margin of error. Although the plaintiff's venture was a new one, the court found that: the parties had contracted with an eye to plaintiff's marketing the product; the product was ready to be marketed; and there was a reasonable probability that, considering all the circumstances, 75 per cent of the books would have been successfully marketed.

In the case at hand the defendant assumed a greater responsibility in the new venture. Nevertheless, Singer's claim of imperfectability of the device is analogous to the defense raised in For Children, Inc. (that a 15 per cent margin of error was insurmountable) and has been similarly rejected. Moreover, had Singer fulfilled its obligations under

the December contract, the anti-skid device would have proceeded to market as anticipated.

The remaining determination then is whether damages here are altogether too speculative to assess, or whether there is some reasonable basis on which damages can be computed. It has been held repeatedly that where the defendant renders the determination of damages difficult, he must bear the risk of uncertainty created by his own conduct. Story Parchment Co. v. Paterson Parchment Paper Co., 282 U.S. 555, 563 (1931); Eastman Kodak Co. v. Southern Photo Co., 273 U.S. 359, 379 (1929); Autowest, Inc. v. Peugot, Inc., 434 F.2d 556, 565 (2d Cir. 1970); For Children, Inc. v. Graphics Int'l, Inc., 352 F. Supp. 1280, 1284 (S.D.N.Y. 1972) Furthermore, the Court in Story Parchment defined the prohibition against an award of speculative damages as barring those damages which "are not the certain result of the wrong, not . . those damages which are definitely attributable to the wrong and only uncertain in respect of their amount." 282 U.S. at 562. As was said in the Flexitized case, supra, the evidence need not establish lost profits precisely to the penny as long as the evidence provides a reasonable basis for concluding that lost profits were occasioned by the defendant's breach.

The parties have suggested various alternative figures upon which damages should be computed.

It is conceded by both parties that the market for automobile parts and accessories is divided into the OEM (original equipment manufacturers) and the aftermarket (manufacturers and retailers of accessories for automobiles). The defendant offers numerous proposed findings of fact to demonstrate that the Perma device would not have succeeded in either of these markets. Numerous proposed findings are also offered to demonstrate the relative failure of the major automobile manufacturers to market antiskid devices as part of the original equipment on their 1969 - 1974 models.

Not only have such devices been unsuccessful in the OEM, but Singer also argues that the Perma device would not have been selected by the major automobile manufacturer. Singer relies on the testimony of its witness Bechtold that there is a three year development period from the year in which automotive manufacturers accept an accessory until the time they offer it as original equipment. Thus they argue that the Kelsey-Hayes device which Ford offered in 1968 was necessarily in the Ford product development cycle in 1966, when the Perma device was first to have been marketed. Singer argues that the Perma device could not have been placed on Ford cars until 1969. In any case, they contend that the Perma device would have required extensive and expensive modification in order to ready it for use on

[R 132]

a 1967 model car. Thus they conclude that the retail price of the Perma device would have been greater than or equal to the price of the allegedly superior device which was selected by Ford.

The essence of this line of argument is that in the unlikely event that the Perma device was selected by the major car manufacturers, it would have enjoyed only limited success.

Plaintiff meets these contentions with the observation that Bechtold, on cross-examination, retreated from his testimony that the three year developmental cycle is invariable. Thus the Perma device might well have been available to and selected by the major automobile manufacturers prior to the other comparable devices. Moreover, they point out that the unimpressive sales record of those devices that have been offered as original equipment reflects the self-evident observation made in the Hill Report that "sales volume will depend on the amount of promotional efforts."

The defendant also argues that there have been virtually no sales in the aftermarket of the comparable anti-skid devices which have been available for almost five years. Plaintiff concurs in that observation which they view as inuring to their benefit since the Perma device would have

[R 132]

encountered no competition in the automobile aftermarket, admittedly the principal market in which the parties planned to sell the device.

Defendant's additional proposed findings that Perma had no marketing experience in the OEM or aftermarket; that Perma had responsibility under the June contract for marketing the device; and that Perma had not validly assessed the probable success of the anti-skid device in either the OEM or aftermarket are equally unavailing to defendant in its attempt to minimize damages. The first two points are irrelevant since it was Singer, not Perma, which had the responsibility of marketing the device under the December 21, 1964 contract, the relevant contract in this action. Nor was Perma obligated to assess the probability of success of the device in the OEM or aftermarket.

Defendant urges a finding that its sales projections were based totally on Perma's marketing forecasts. Under the June contract, Patten, Singer's sales manager at Elizabeth, received marketing forecasts from Perma which, when requested, he would incorporate into internal Singer memoranda. In evaluating the merits of what was to become the December contract, Kloby relied, it is urged, on the same sales projections which Perma had supplied under the June contract. Kloby's failure to evaluate potential sales

independently can, however, be interpreted as an endorsement of Perma's sales projections.

In any case, these figures were accorded sufficient weight by the defendant to form a basis upon which Singer decided to take over marketing of the device. Similarly, the Hill Report to Kloby, discussed supra at pp. 16-18, 35-36, cited by the defendant to show the lack of interest in the device among major automobile manufacturers, also noted a large potential for sales of the device in the aftermarket. At the same time that it relies on this report to substantiate the bleak prospects for the device in the OEM, the defendant challenges the foundation for the report, rendered at its own request, in an attempt to diminish the impact of the report's enthusiastic evaluation of the device's sales potential in the aftermarket.

In view of the fact that this report is dated December 14, 1964, only a week before the defendant entered the December 21, 1964 contract in which Singer undertook marketing responsibility for the device, it is a fair conclusion that the aftermarket sales projections were perceived by the defendant as justifying the undertaking despite the limited sales potential in the OEM.

In Autowest, Inc. v. Peugot, Inc., 434 F.2d 556 (2d Cir. 1970), the evidence admitted on damages for the

defendant's wrongful termination of an automobile distribution franchise consisted of sales projections prepared by plaintiff's witnesses, both of whom had had years of experience in the industry. The figures were "the product of deliberation by experienced businessmen charting their future course." 434 F.2d at 566. The fact that the projections were prepared by defendant's employees in deciding whether or not to proceed with a course of business was found to increase their reliability since they were not "mere 'interested guess[es]' prepared with an eye on litigation." 434 F.2d at 566.

These same indicia of reliability are present in the figures prepared by Kloby based upon which Singer entered the December 21, 1964 contract. Kloby, experienced in market evaluation and surveys, compiled a report at Mr. Morris' request evaluating the proposal that Singer take over marketing responsibility for the device. The defendant relied upon this report in deciding to enter the December contract. Clearly these projections, prepared by the defendant's market expert, were not put together with an eye to litigation. The argument that the figures merely parrot the reports of Perma to the Elizabeth staff has been dealt with above. If Singer's experts judged them sufficiently reliable to justify entering a contract without

further market analyses, then I have no reason to challenge their accuracy.

For the reasons recited, I find that the so-called Kloby figures, which projected sales for the first five years of the ten year contract, provide the best basis on which to compute damages. According to these figures 150,000 units were to be sold in the first two years that the device was marketed with 200,000 units being sold in each of the next five years. These figures are variously substantiated by: (1) Kloby's report to Morris on the feasibility of taking over marketing of the device, which report Morris forwarded to Mr. Murphy in Singer's New York office, who, in turn, reported to his superior Mr. Hough; (2) Hough's December 11, 1964 memorandum to his superior, Mr. Kircher, recommending favorable action on the marketing proposal; (3) a December 21, 1964 internal Singer memorandum from Mr. Torello to Mr. Marsden; and (4) a January 18, 1965 distribution contract between Singer and Monitor Enterprises, Inc. It is eminently rational to project that the 200,000 units per year level which Singer expected to attain after the first two years would at least have been maintained for the second five years of the ten year contract.

Alternative bases for the computation of damages have been offered by the parties and are rejected. The higher

figure of 250,000 units for the first two years, which is suggested by the plaintiff, is derived from (1) March 13, 1964 minutes of a Singer meeting on the feasibility of entering the June contract for manufacture of the device and (2) the June 18, 1964 contract itself. The figures relied on by Singer in entering the manufacturing contract were out of date by the time of the December contract and cannot bind the defendant.

Nor will I base damages on the number of units (approximately 139,000) which Perma had contracted to sell to distributors prior to the December contract. The defendant disputes the reliability of these contracts on the grounds that the plaintiff failed to prove the size, financial position, and market experience of the various distributors. Plaintiff meets this argument with the observation that in 1965 Patten and Kloby undertook negotiations with several of the distributors in order to induce them to relinquish their contract rights so that Monitor Enterprises, Inc. (one of the distributors) could become the exclusive distributor for the device in the United States. In any case, at the time it entered the December contract Singer was aware of these agreements and necessarily considered them as a factor in formulating the sales projections on which I have determined to base the damages.

The defendant's suggested lower figures of 100,000 units for the first two years and none thereafter is equally unpersuasive. The 100,000 figure is derived from the Hill Report*/ of December 14, 1964 which predated several of the documents listed above which demonstrate that Singer entered the December contract with the higher figures in mind. Similarly, limiting damages to two years ending in the fall of 1968 when the Kelsey-Hayes device became available is unacceptable since according to the defendant's own proposed findings of fact the Kelsey-Hayes device was never promoted in the aftermarket and would, therefore, have posed no threat to the Perma device which was to have been sold predominantly in the aftermarket.

The royalties were to be paid, according to the terms of the December 21, 1964 contract, as follows: (1) as to sales in the aftermarket, none on the first 36,700 units, 10% of the factory invoice price for a period of 5 years and 5% of the factory invoice price for an additional 5 years; (2) as to sales in the OEM, 5% of the factory invoice price for a period of 10 years from the date of the contract;

---

*/ Apparently the defendant views this document as a mixed blessing which it will endorse when favorable, but will ignore when damaging.

(3) as to royalties received by Singer on the manufacture and use of the device by licensees in the OEM, 25% of such royalties for a period of 10 years from the date of the contract. Since damages on this last basis would be too speculative, no such licensing contracts having been negotiated, damages will be computed solely on the first two provisions for direct sales of the device.

The parties agree that the device was first to have been marketed in 1966, thus damages will be assessed beginning in that year. It is clear from the proof that the projected sales for the first two years were to be made solely in the aftermarket, therefore the 10% royalty is appropriate for that period. As to the remaining years in the first five year portion of the December 1964 contract, it would be equitable to apportion the damages for sales in both the aftermarket and the OEM. There being no adequate proof on which to make such an apportionment, a compromise royalty of 7-1/2% will be applied to sales for those 2 years.

According to Singer's January 18, 1965 contract with Monitor, the factory invoice price was to be $51. Additional factors which should be taken into account are simple interest (New York CPLR § 5001) as fixed by New York CPLR § 500- and market expansion as reflected in the increased auto registration for each of the relevant years.

The damages will not reflect a factory invoice price adjustment based on inflation. Such an adjustment could only be made after similarly adjusting manufacturing costs upon which there is inadequate proof. Moreover, after all the necessary adjustments were made it is unlikely that the result would be significantly altered.

Computation of Damages
Exclusive of Interest to be Computed by
the Parties in the Proposed Judgment

1965	---		
1966	50,000	(units)	
	-36,700		
	13,300		
	x$5.10		(10% of invoice price)
	$67,830		
1967	102,600	(units)	(including market growth based on increased registration)
	x$5.10		
	$523,260		
1968	210,907	(units)	
	x$3.83		(7-1/2% of invoice price)
	$807,773.81		
1969	218,921	(units)	
	x$3.83		
	$838,467.43		
1970	226,583	(units	
	x$2.55		(5% of invoice price)
	$577,786.65		

1971	232,248 x$2.55 $592,232.40	(units	
1972	243,164 x$2,55 $620,068.20	(units	
1973	251,675 x$2.55 $641,771.25	(units)	(based on projected market increase derived from the average market increase from 1966 - 1972)
1974	260,484 x$2.55 $664,234.20	(units)	(based on projected market increase)

CONCLUSION

Judgment will enter for the plaintiff in accordance with this opinion along with interest to be calculated at the legal rate on a monthly basis from the date of the incurrence of the damages awarded. The defendant is to bear the entire costs.

Settle judgment on notice.

U. S. D. J.

Dated: New York, New York

April 11, 1975.

1/ A third contract was entered into by the parties which is referred to herein as the "Technical Services Contract". No breach has ever been claimed of this contract although it will be referred to from time to time throughout this opinion.

2/ It is astounding to me that in the hundreds of pages of proposed findings and conclusions and briefs submitted by the representatives of Singer there is not one mention of the Hill report, except to serve as a crutch on the question of damages.

APPENDIX "A"

[R 132]

Nov. 11, 1969 F. A. PERRINO 3,477,755

APPLICATION RESPONSIVE DEVICES FOR ANTI-SKID UNITS

Original Filed Nov. 6, 1964 7 Sheets-Sheet 1

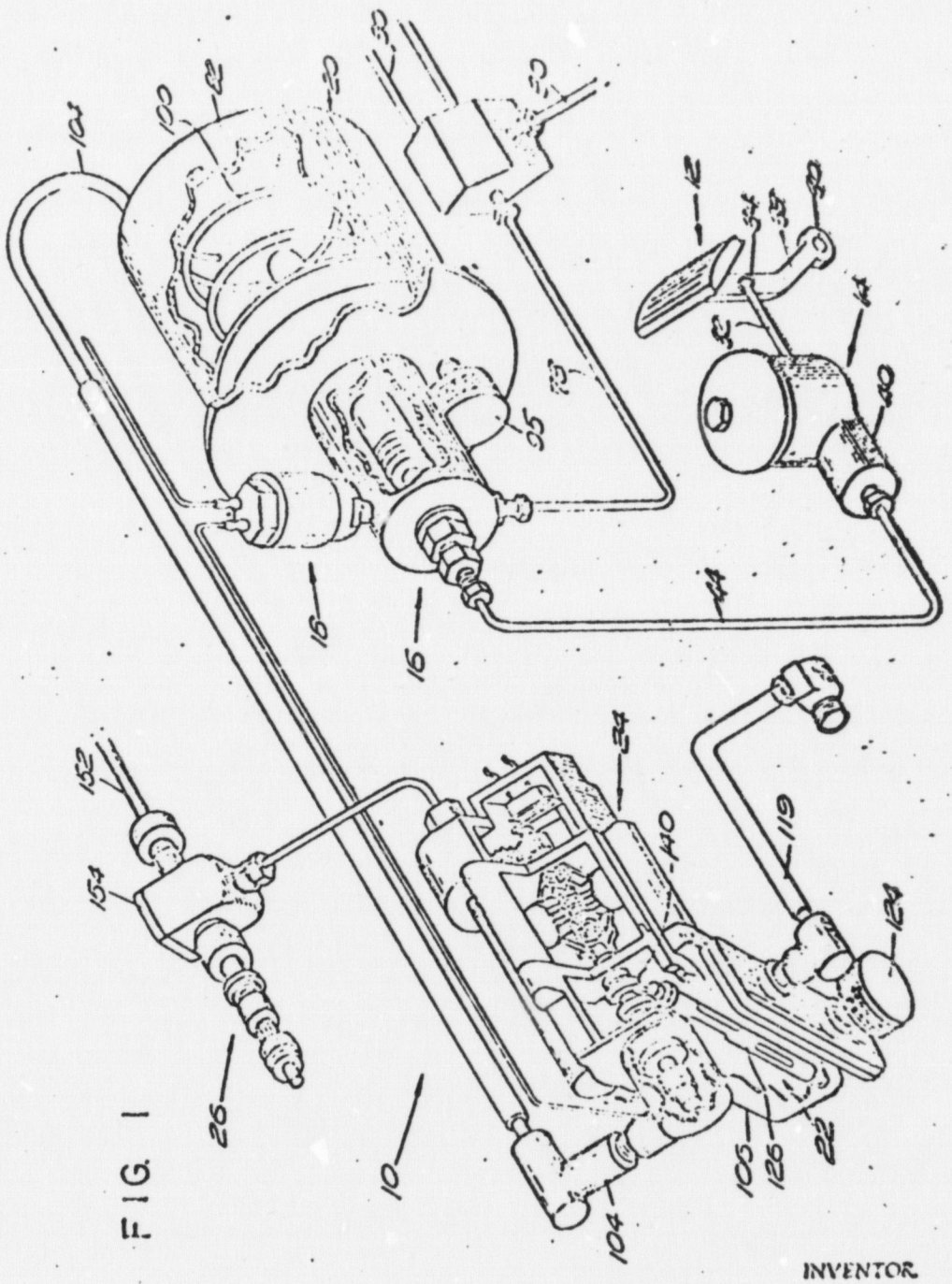

FIG. 1

INVENTOR.
FRANK A. PERRINO

BY

ATTORNEYS

A-1

Nov. 11, 1969 F. A. PERRINO 3,477,765

ACCELERATION RESPONSIVE DEVICES FOR ANTI-SKID UNITS

Original Filed Nov. 2, 1964 7 Sheets-Sheet 2

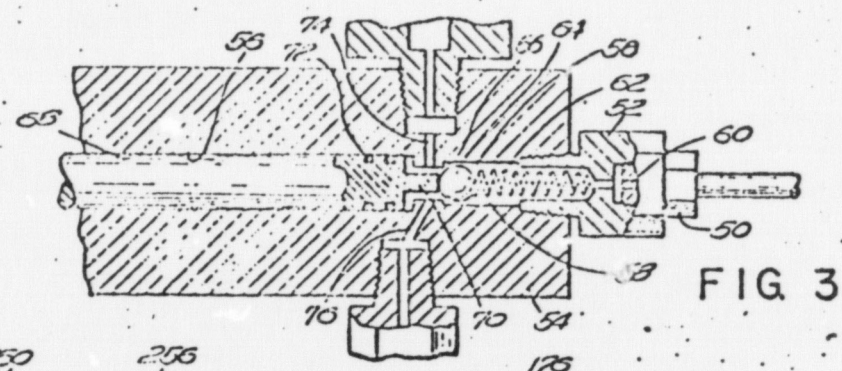

FIG. 3

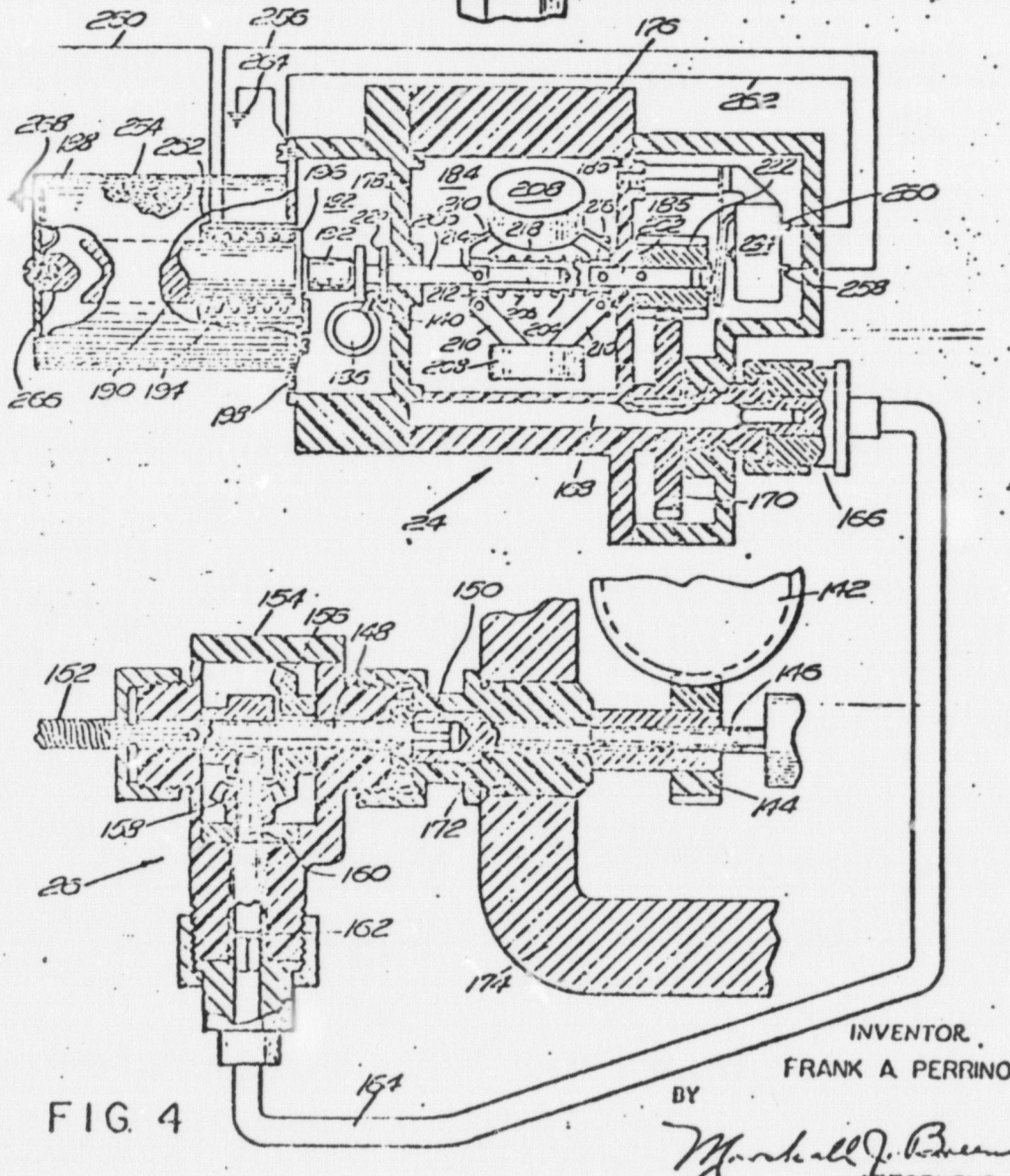

FIG. 4

INVENTOR.
FRANK A PERRINO
BY
Marshall J. Breen
ATTORNEYS

A-2

Nov. 11, 1969 F. A. PERRINO 3,477,765

ACCELERATION RESPONSIVE DEVICES FOR ANTI-SKID UNITS

Original Filed Nov. 2, 1964 7 Sheets-Sheet 3

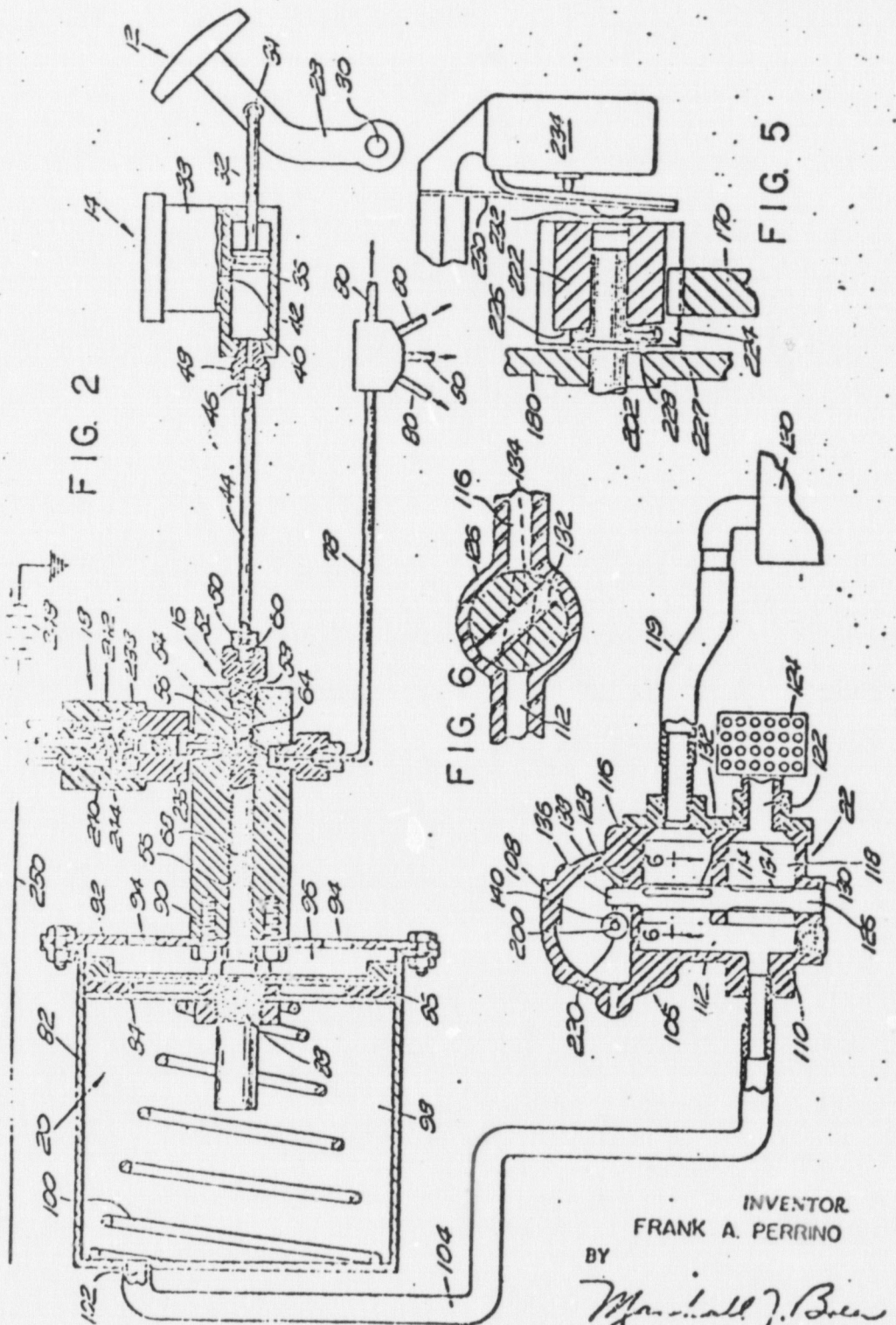

FIG. 2

FIG. 5

FIG. 6

INVENTOR
FRANK A. PERRINO
BY
Marshall J. Bell
ATTORNEYS

A-3

[R 1.32]

Nov. 11, 1969 F. A. PERRINO 3,477,765

ACCELERATION RESPONSIVE DEVICES FOR ANTI-SKID UNITS

Original Filed Nov. 2, 1964 7 Sheets-Sheet 4

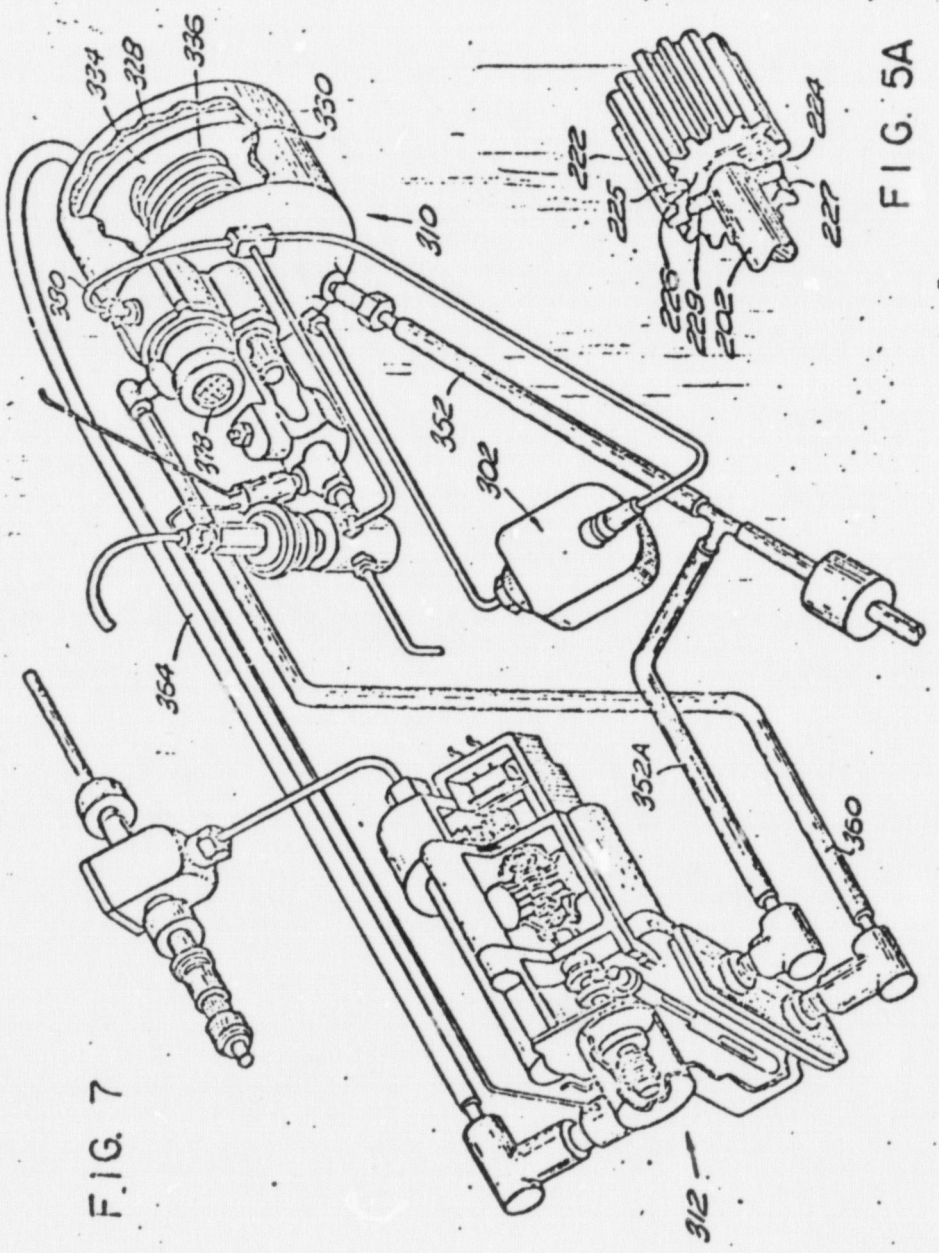

FIG. 5A

FIG. 7

INVENTOR.
FRANK A. PERRINO

BY

Marshall J. Breen
ATTORNEYS

Nov. 11, 1969 F. A. PERRINO 3,477,765

ACCELERATION RESPONSIVE DEVICES FOR ANTI-SKID UNITS

Original Filed Nov. 2, 1964 7 Sheets-Sheet 5

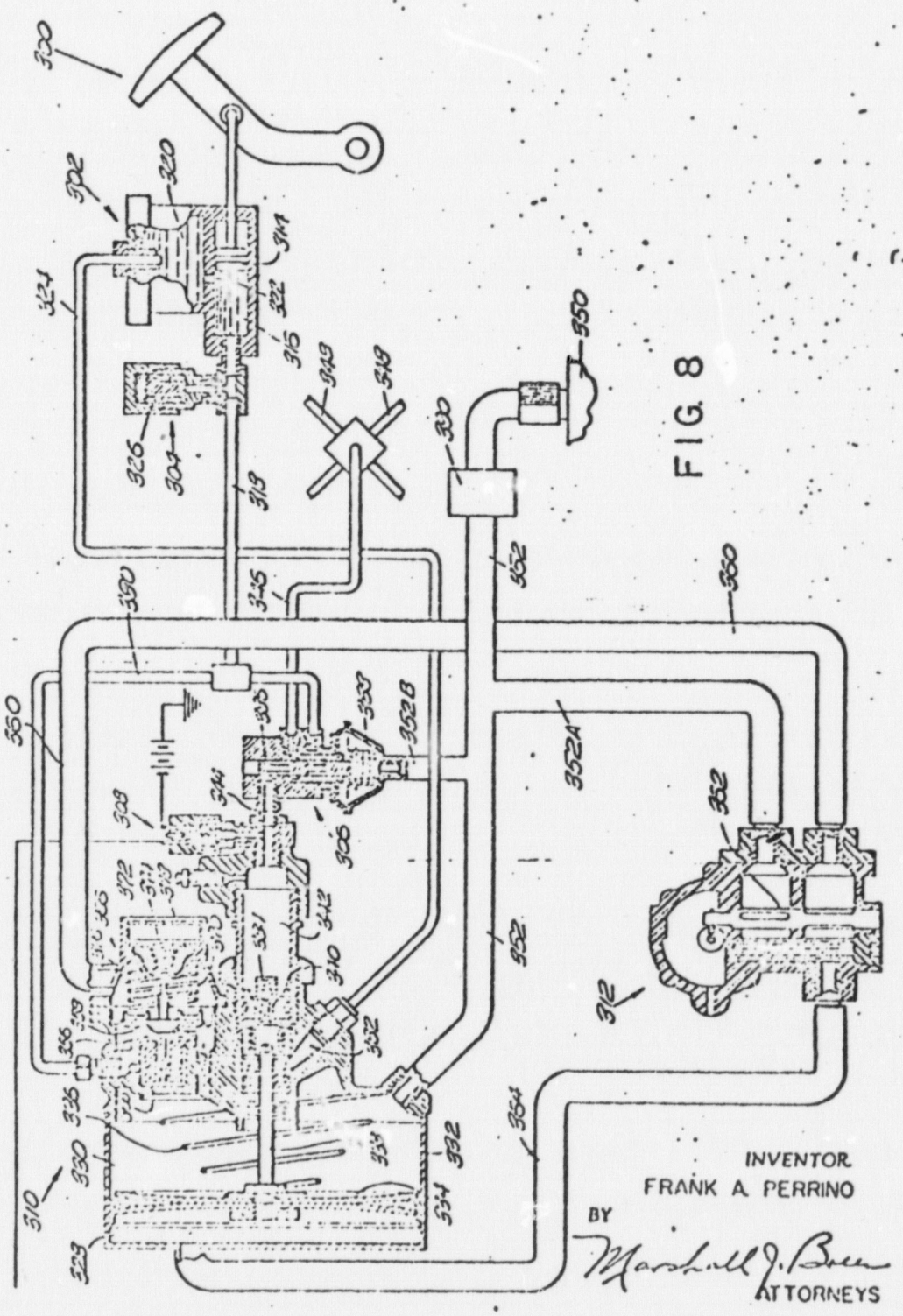

FIG. 8

INVENTOR
FRANK A. PERRINO
BY
Marshall J. Bell
ATTORNEYS

A-5

[R 132]

ACCELERATION RESPONSIVE DEVICES FOR ANTI-SKID UNITS

Original Filed Nov. 2, 1964 7 Sheets-Sheet 6

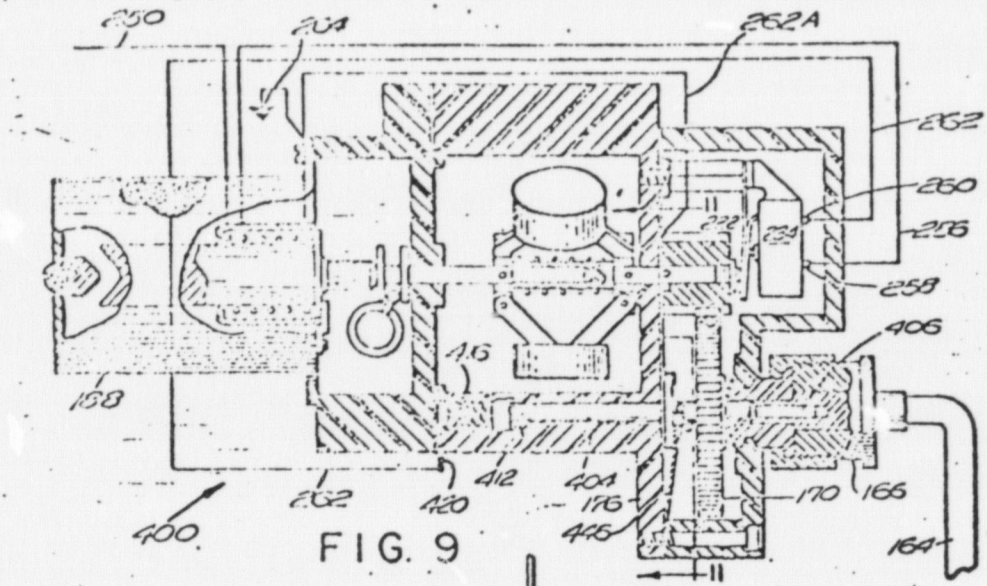

FIG. 9

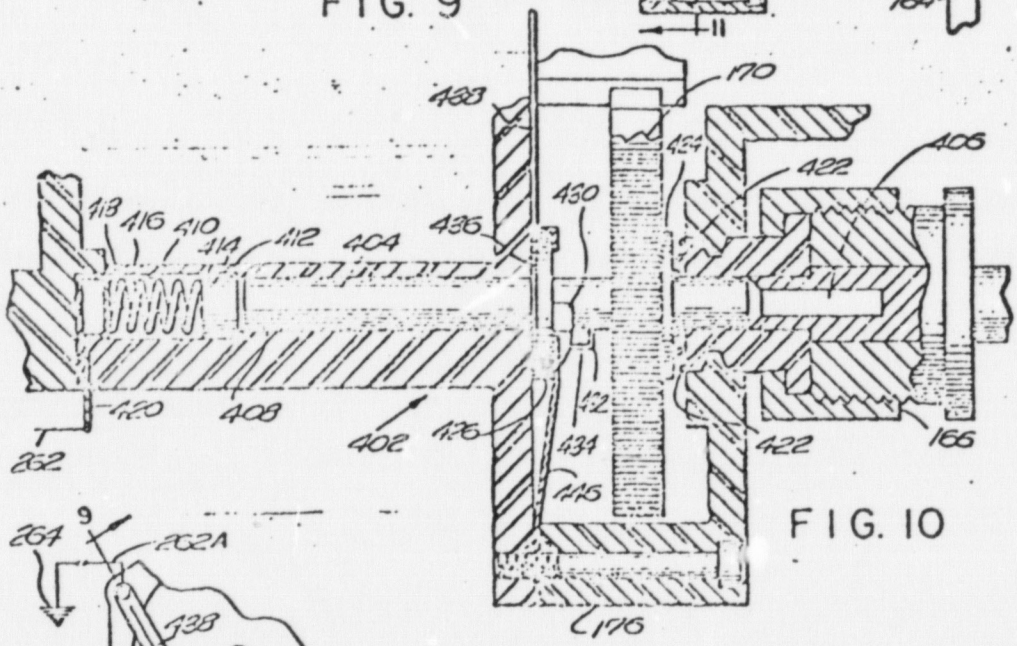

FIG. 10

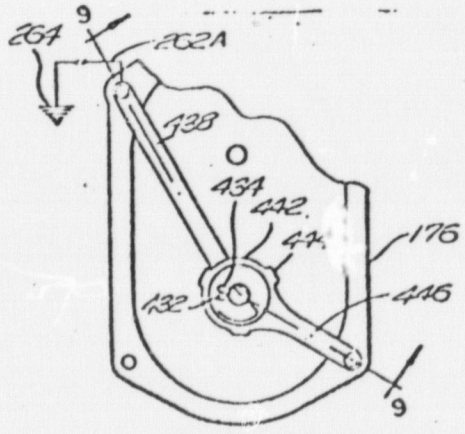

FIG. 11

INVENTOR.
FRANK A. PERRINO
BY
Marshall J. Breen
ATTORNEYS

[R 132] A-6

Nov. 11, 1969 F. A. PERRINO 3,477,765

ACCELERATION RESPONSIVE DEVICES FOR ANTI-SKID UNITS

Original Filed Nov. 2, 1964 7 Sheets-Sheet 7

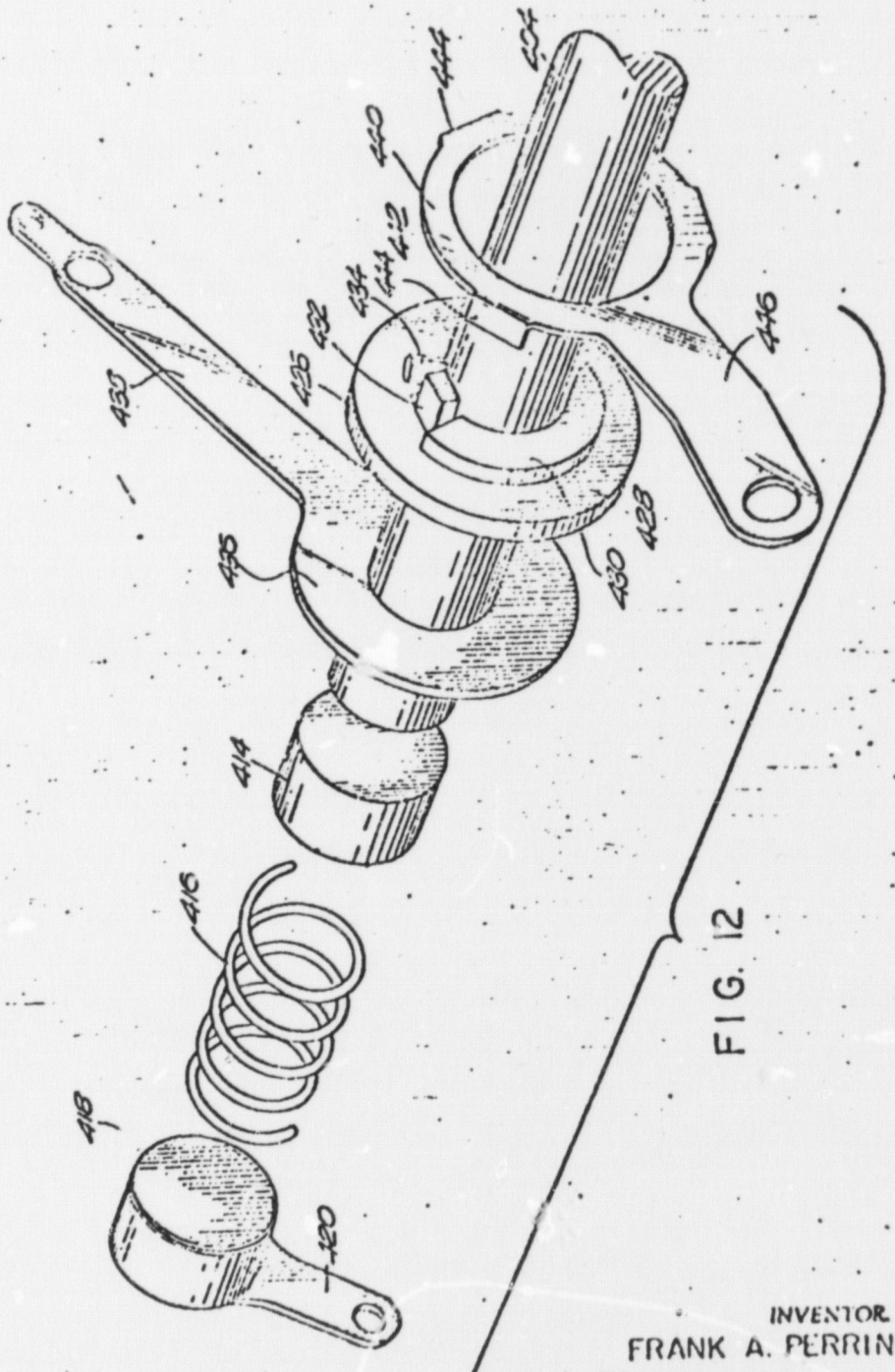

FIG. 12

INVENTOR
FRANK A. PERRINO
BY
Marshall J. Breen
ATTORNEYS

[R 132] A-7

3,477,765

ACCELERATION RESPONSIVE DEVICES FOR ANTI-SKID UNITS

Frank A. Perrino, North Attleboro, Mass., assignor, by mesne assignments, to The Singer Company, New York, N.Y., a corporation of New Jersey

Original application Nov. 2, 1964, Ser. No. 409,350, now Patent No. 3,325,226, dated June 13, 1967. Divided and this application Aug. 5, 1966, Ser. No. 581,676

Int. Cl. B60t 8/24

U.S. Cl. 303—21 4 Claims

ABSTRACT OF THE DISCLOSURE

An anti-skid brake system in which a sensing means for sensing when a skid condition begins is caused to activate a wheel speed-sensitive device that takes over control of the brake pressure until the skid condition ends. The sensing means is an inertia-responsive means that senses a sudden change in the speed of rotation of a wheel at the commencement of skid conditions. The control of the brake pressure is taken over completely by a mechanical governor driven dependently with the wheel. The governor then controls the brake pressure in a hunting or modulating manner, for an extended period, until such control of the brakes is ended by a reset means that responds to slowing of the vehicle to a predetermined speed. Preferably, the reset means is a brake-pressure-sensitive device which senses reduction of brake pressure to a predetermined level which the governor can produce only when it slows to the predetermined speed.

This is a division of application Ser. No. 409,350, filed on Nov. 2, 1964, and entitled Braking System and Anti-Skid Means Therefor, now U.S. Patent No. 3,325,226.

The present invention relates generally to braking systems for automotive vehicles and the like and is particularly concerned with the provision of novel and improved anti-skid means.

It is well known that a skid condition may be encountered by a moving vehicle where the brakes of the vehicle are applied so hard that the vehicle wheels tend to lock. Quite obviously, other factors affect the commencement and existence of a skid condition, such as the condition of the surface on which the vehicle is moving, the speed at which the vehicle is traveling, etc. However, it is possible for a vehicle to commence a skid even where the surface on which the vehicle is traveling is not wet or icy and even where the vehicle is traveling at moderate speeds, if the vehicle brakes are applied too hard. Since all control of a vehicle is lost while the vehicle is in a skid, thus increasing the danger of serious accident and personal injury, it is obviously highly desirable to prevent or reduce skidding while at the same time enabling the vehicle to come to a complete stop as quickly as possible.

It is therefore a primary object of the present invention to provide an improved braking system wherein operation of the brakes is under control of the vehicle operator until a skid condition commences to exist, at which time anti-skid means automatically take over complete control of the brakes and maintain said control until danger of skidding no longer exists, whereupon the brakes are returned to normal control by the operator.

Another object of my invention is the provision of efficient and sensitive control means for the various operations of the system, which have usefulness in other types of systems as well.

Another object of my invention is the provision of novel and improved anti-skid means equally adaptable to so-called power brakes, as well as nonpower brakes.

A further object of my invention is the provision of anti-skid means of the character described wherein the vacuum system of the vehicle is utilized, but wherein the loss of vacuum in no way interferes with control of the vehicle brakes by the operator.

A further object of my invention is the provision of anti-skid means that is readily and easily adaptable to existing vehicles.

Another object is the provision of a novel and improved reverse cut-off switch that automatically renders the anti-skid means inoperative when the vehicle moves in reverse.

Still another object of my invention is the provision of an anti-skid system for automotive vehicles and the like having means which are durable and effective in operation and which are feasible and practical both from an economic and manufacturing standpoint.

Other objects, features and advantages of my invention will become apparent as the description thereof proceeds when considered in connection with the accompanying illustrative drawings

In the drawings which illustrate the best mode presently contemplated for carrying out the present invention:

FIG. 1 is a diagrammatic view, in perspective, of the assembly utilized in my nonpower unit, with portions being broken away for purposes of illustration;

FIG. 2 is an elevational view, in section, of a portion of the overall assembly illustrated in FIG. 1;

FIG. 3 is an enlarged fragmentary sectional elevation of a portion of the brake-actuating means illustrated in FIG. 1;

FIG. 4 is an enlarged fragmentary sectional elevation illustrating certain details of the anti-skid unit and the drive means therefor;

FIG. 5 is an enlarged sectional elevation of the cam gear and solenoid-actuating switch which form a part of the anti-skid unit;

FIG. 5A is an enlarged fragmentary perspective view of the cam gear;

FIG. 6 is an enlarged section taken on line 6—6 of FIG. 2;

FIG. 7 is a diagrammatic view, in perspective, of my anti-skid means in combination with a power brake unit, portions being broken away for purposes of illustration;

FIG. 8 is an elevational view, in section, of the power brake assembly illustrated in FIG. 7;

FIG. 9 is an enlarged fragmentary sectional elevation illustrating certain details of the anti-skid means and the reverse cut-off switch in combination therewith;

FIG. 10 is an enlarged fragmentary sectional elevation of the reverse cut-off switch per se;

FIG. 11 is a fragmentary section taken on line 11—11 of FIG. 9; and

FIG. 12 is an enlarged exploded perspective view of the reverse cut-off switch per se.

According to one aspect of my invention, a sensing means for sensing when a skid condition begins is caused to activate a wheel speed-sensitive device that takes over control of the brake pressure until the skid condition ends. Advantageously, the sensing means is an inertia-responsive means that senses a sudden change in the speed of rotation of a wheel at the commencement of skid conditions. This inertia-responsive device does not control the brake pressure itself by repeated action during the skid condition, as has been attempted by the prior art. Instead the control of the brake pressure is taken over completely by a governor driven dependently with the wheel, advantageously a mechanical governor. The governor then controls the brake pressure in a hunting or modulating manner, for an extended period, until such control of the brakes is ended by a reset means that responds to slowing of the vehicle to a predetermined

speed. Preferably, the reset means is a brake-pressure-sensitive device which senses reduction of brake pressure to a predetermined level which the governor can produce only when it slows to the predetermined speed.

This separation of the initiating and controlling functions is an extremely important feature. The initiating device must necessarily have a restraint to prevent operation when the vehicle merely decelerates normally. I have realized that such a restraint prevents the device from being able to effectively regulate the brake pressure due to lack of sensitivity. The governor, after it takes over control, is free of such restraint and therefore can have much greater sensitivity with the result that the brake pressure can be much more accurately regulated.

The reset device is also of critical importance because at low speeds, e.g. below 10 m.p.h., the governor forces can become so diminished that the governor can behave entirely as if the vehicle were skidding, though not, thereby totally relieving the brake pressure. The reset device can act before this occurs, whereby normal control is regained.

A further aspect of my invention concerns the realization that a predetermined level of brake pressure, e.g. the minimum brake pressure at which skidding of the vehicle will occur on ice, generally between 100-150 p.s.i. for conventional automobiles, can be utilized to determine the setting for the brake pressure-sensitive reset device. Thereby, only at the time when skidding is no longer possible will control be taken away from the anti-skid unit to return the brake system to normal operation. This pressure-sensitive device, particularly when taking the form of a brake fluid pressure-sensitive switch, is useful with anti-skid systems generally, though of particular usefulness in the system described above.

Advantageously, the brake pressure-sensitive switch operates an electrical system, preferably a solenoid, to restore normal brake operation, and it can be employed to bring the anti-skid unit into readiness whenever the operator applies the brakes, as well as to stop the anti-skid unit functioning when skid conditions have ended. Another aspect of the invention concerns the control of the governor. In normal operation of the brakes, the governor is isolated from influencing the brakes, but upon activation, e.g. by the inertia-sensitive device, it is caused continually to act, even when the vehicle wheel speed is up after the brakes have been initially relieved. A solenoid controlling restraining member, preferably a solenoid, is employed to achieve this operation, with the control-member being held steadily from interfering with the governor until the reset device operates. In the case where a heavy weight mechanical governor is employed, a plunger normally restrains the governor and a solenoid, initially under the control of the inertia-responsive device, can pull back the plunger to free the governor, whereupon the plunger can operate a switch to maintain the solenoid energized, and at the end of skid conditions the reset device can de-energize the solenoid to once again restrain the governor.

Another aspect of the invention is a fluid valving system that responds to the governor to increase and decrease brake pressure. Advantageously, the valve, discharging to a brake control conduit, is moved by the governor alternately between two positions to connect two passages for fluid at different pressures to the conduit. This causes the brake pressure to rapidly vary in a modulating or hunting manner, to keep the brake pressure at maximum values while preventing skidding. The mean about which the pressure modulates changes as the slipperiness of the road changes, due to the effect such road changes have upon the governor.

For use in a closed-circuit hydraulic system, the direct control of the brakes is achieved, according to the invention, by an isolation valve that continually seals the wheel brake from the control of the operator, and a variable volume chamber, e.g. piston and cylinder, for relieving and reapplying brake pressure to the wheel, the piston oscillating about a mean determined by the modulating pressure conditions of the brake control conduit. Advantageously, the piston, at the position where it allows full pressure, can operate the isolation valve. Then the piston being spring loaded to that position can also perform a pressure-limiting function, limiting brake pressure to e.g. 1,000 p.s.i., though the operator is capable of applying twice that much. In normal operation the brakes function as well at 1,000 p.s.i. as above, and by so limiting the brake pressure, less pressure is present to be relieved when a skid occurs, which enables faster action and allows the relief chamber to be smaller.

In other brake systems the brake control conduit can control a power unit, or in the case of air brakes, it can directly control the brake actuators associated with the wheels.

Furthermore, according to the invention, I have provided advantageous and improved constructions of the various operating components and sub-systems which can best be described with reference to the drawings.

Referring now to the drawings, and more particularly to FIGS. 1–6 thereof, a closed hydraulic circuit braking system employing my novel and improved anti-skid means in combination with a so-called nonpower brake will be described. The over-all system, generally designated as 10, comprises brake pedal 12, master cylinder 14, brake-relieving device 16, hydraulic pressure switch 18, relief actuator means 20, conduit valve means 22, skid-sensing and control means 24, and anti-skid unit drive means 26.

Referring to FIGS. 1 and 2, the brake pedal 12 is of conventional construction and comprises bell crank 28 pivotally connected to a suitable support on the vehicle (not shown) at 30 whereupon depression of pedal 12 causes bell crank 28 to rotate in a counterclockwise direction around pivot point 30, thus actuating connecting rod 32 pivotally connected to bell crank 28, as at 34. Rod 32 carries at its other extremity a piston 36 which functions to pump oil or other suitable fluid from master cylinder 14, all in a well-known manner. Specifically, master cylinder 14 has an upper reservoir 38 which communicates with lower chamber 40 by means of opening 42 whereupon a full supply of oil is always present in the chamber 40 to be pumped by actuation of pedal 12 and piston 36.

Fluid pumped from master cylinder 14 passes through a conduit 44 connected at one of its extremities by suitable couplings 46, 48 to chamber 40 of master cylinder 14 and at its other extremity by a suitable coupling 50 to the brake-relieving device generally designated at 16, which incorporates an isolation valve. More specifically, coupling 50 is connected to a second coupling 52 which is threadedly attached to block 54, said block having a bore 56 extending longitudinally therethrough into communication with aligned longitudinally extending bores 58 and 60 in couplings 52 and 50, respectively.

As will be seen most clearly in FIGS. 2 and 3, coupling 52 is provided with an internal shoulder for receiving positioning spring 62 which positions isolation valve ball 64 adjacent valve seat 66, tending to close with slight force the bore or passageway 56. During normal operation of the vehicle, ball 64 is maintained in its unseated position, as illustrated in FIGS. 2 and 3, against the action of spring 62, by means of spring-loaded actuator piston 68 having a reduced extension 70 in engagement with ball 64. Suitable O-rings or the like 72 are provided to insure a tight sliding fit between piston 68 and bore 56 whereby said piston effectively blocks further flow of fluid through bore 56.

Block 54 is provided with a pair of oppositely disposed passageways 74 and 76, it being noted that said passageways communicate with bore 56 just behind valve seat 66, whereupon when ball 64 is in its closed position in engagement with valve seat 66, fluid in conduit 44 from the master cylinder will be blocked before reaching the

A-9

passageway 74 and 76. Passageway 74 communicates with hydraulic pressure reset switch 18 for reasons hereinafter to be described, while passageway 76 communicates by means of suitable couplings with conduit 78, which in turn communicates with the hydraulic brake lines 80 leading to the wheel hydraulic actuator cylinders (not shown) of the vehicle to actuate the brakes in well-known fashion. Here it will be seen that with the parts in the positions illustrated in FIGS. 2 and 3, and particularly with piston 68 in the position illustrated, brake pedal 12 controls actuation of the vehicle brakes through a direct line. This is the normal operating condition of the vehicle.

The actuator for the relieving device 16, generally designated at 20 (FIGS. 1, 2) controls the movement of piston 68 and hence ball 64. This actuator comprises a housing or cylinder 82 having a large piston 84 slidably mounted therein, said piston having suitable seals 86 at its outer periphery to insure that the piston 84 will make a tight sliding fit within cylinder 82 whereby no leakage will exit around the piston. Piston 84 is threadedly connected, as at 88, to the aforementioned small hydraulic piston 68, whereupon movement of large piston 84 causes corresponding movement of piston 68. Housing 82 is secured to block 54 by any suitable means, such as screws 90, and the adjacent end wall 92 of the housing 82 is in free communication with atmosphere, as by ports 94. Suitable air filters, such as shown at 95 in FIG. 1, may be associated with the parts 94. It will thus be seen that the chamber 96 located on one side of large piston 84 is always at atmospheric pressure, while chamber 98, located on the opposite side of piston 84, may either be at atmospheric pressure or it may be vacuum charged, as will hereinafter be described in more detail. When the chambers 96 and 98 are both at atmospheric pressure, spring 100 resiliently urges pistons 84 to the position illustrated in FIG. 2, it being seen that the piston 84 has moved to the right as far as it can go. In this position, the piston 68 has also been axially moved to the position illustrated, in which position extension 70 (FIG. 3) has engaged ball 64 to unseat it from valve seat 66. Thus, where chambers 96 and 98 are both at atmospheric pressure, the vehicle brakes are under the complete control of the brake pedal 12. However, when chamber 98 is vacuum charged, the pressure differential between chambers 96 and 98 is sufficient to overcome spring 100, whereupon piston 84 will move to the left, viewing FIG. 2, thus causing corresponding movement to the left of piston 68. This in turn enables ball 64 to seat against valve seat 66, by means of spring 62, thus blocking the bore 56 and preventing actuation of the brakes by means of brake pedal 12. As pistons 84 and 68 move further to the left due to the presence of a vacuum or even a partial vacuum in chamber 98, hydraulic pressure in lines 78 and 80 and in the spring-loaded brake actuators associated with the vehicle wheels will be relieved, due to the fact that the fluid is now free to back up into that portion of bore 56 that has been vacated by movement of piston 68 to the left. It will therefore be seen that by introducing a vacuum or partial vacuum to chamber 98, fluid pressure in lines 78 and 80 will automatically be relieved, thereby relieving the brakes. By the same token, as soon as atmosphere is again introduced to chamber 98 to equalize the pressure in chamber 96, the brakes can once again be fully actuated by the pedal 12. It will be apparent that the amount of vacuum introduced to chamber 98 will determine the amount of reduction in brake pressure. More specifically, the greater the vacuum that is introduced to chamber 98, the greater will be the movement of piston 84 to the left (viewing FIG. 2) and at the same time there will be greater movement of piston 68 to the left, thus vacating more of bore 56 and providing greater relief of the hydraulic brake pressure. Similarly, given a certain amount of relief due to a certain amount of vacuum, then decrease in the amount of vacuum will increase the hydraulic brake pressure due to movement of the pistons to the right. The ability of my system to provide varying degrees of relief and restoration of brake pressure while the brake pedal remains isolated from the system is an important and advantageous feature.

It will be noted that during normal operation of the system, as heretofore described, i.e., where atmospheric pressure exists in both chambers 96 and 98, the piston 68 will function as a pressure limiter in the system. More specifically, since the piston 68 is resiliently held in the position illustrated in FIG. 2 by means of spring 100, it will back off when excess pressure is applied by foot pedal 12. In practice it has been found that in a conventional automobile pressure above 1,000 p.s.i. or at least above 1,500 p.s.i., depending on the type of vehicle, is unneeded for normal brake operation and hence spring 62 and 100 are preferably calibrated so as to enable ball 64 to seat when pressure in excess of that needed is introduced, thus preventing introduction of excessive pressure to the brakes. It will be obvious that the springs may be calibrated so as to provide a limit at any selected pressure.

The means for introducing either atmospheric pressure or vacuum to chamber 98 and for modulating the degree of vacuum therein will now be described. Referring to FIG. 2, it will be seen that cylinder housing 82 is provided with an opening 102 in communication with chamber 98, which opening communicates with a brake control conduit 104 that in turn connects with the conduit valve, generally designated at 22. More specifically, there is provided a housing 106 having an upper portion 108 which houses the skid-sensing and control means 24, and a lower portion 110 which houses the valve 22. The lower housing 110 comprises an inner chamber 112 having a partition 114 defining a vacuum passage 116 and an atmosphere passage 118. More specifically, vacuum passage 116 is in communication, by means of passage 119, with the intake manifold 120 of the vehicle. Thus, suction is constantly being applied to the passage 116. The passage 118, on the other hand, is in communication with atmosphere through port 122, to which a suitable air filter 124 may be attached, if desired. A rotary valve 126 is mounted for rotation in housing 106, it being noted that valve 126 is an elongated rod that extends vertically through upper partition 128, the aforesaid partition 114, and is journaled in bottom wall 130, the partition and wall being integral parts of a unique molded housing of anti-friction plastic. The valve 126 is provided with a pair of passageways or bores 132 and 134 extending diametrically therethrough, said bores being vertically spaced from each other, and having elongated cross-sections in the axial direction, longer than the diameter of the rod. Bore 132 is associated with passage 116 and bore 134 with passage 118. The bores are angularly disposed with respect to each other, as shown most clearly in FIG. 6. Thus, with the rotary valve 126 in the position illustrated in FIGS. 2 and 6, bore 134 is positioned so as to allow free passage of atmosphere from passages 122 and 118, bore 134 and chamber 112 to brake control conduit 104, whereby atmosphere will flow into chamber 98. At the same time, due to the angular displacement of bore 132, passage 116 will be closed by valve 126, thus preventing suction from manifold 120 and passage 119 from coming into contact with chamber 112 and brake control conduit 104. It will be understood that the only access from passage 116 and 118 to chamber 112 is through valve 126 and more specifically, the bores 132, 134 thereof. Should valve 126 be rotated by means hereinafter to be described, it will be seen that communication between passage 118 and chamber 112 will eventually be blocked, thus interrupting the flow of atmosphere to brake control conduit 104, while at the same time passage 116 will be in communication with chamber 112, whereupon a suction will be applied through brake control conduit 104 to chamber 98.

A-10

It is important to note that use of a rotary valve such as valve 126 is extremely advantageous where passage of a vacuum and atmospheric pressure, or more generally two different pressures, is being controlled due to the fact that the pressure differential offers a minimum of resistance to the turning movement of the small diameter valve. This is contrasted to a reciprocal or poppet type valve wherein movement of the valve is much more resisted by pressure differential.

As hereinbefore explained and described, introduction of a vacuum or partial vacuum to chamber 98 automatically acts to release brake pressure on the vehicle wheels. It has been found in practice that an angular displacement between bores 132 and 134 of approximately 37.5° gives best results in the operation of my system, and it will be understood that rotary valve 126 may not always be positioned so as to completely open or close the bores 132 and 134. Thus, different degrees of movement of valve 126 allow different brake fluid pressures to be exerted on the vehicle wheels, thus providing the proper braking pressures for different road conditions. In instances where the pressure on the brake actuator is the same at the beginning of a skid, (lesser initial pressure requires less relieving), the amount of relief of the brake pressure depends on the amount of travel of piston 84 to the left in chamber 98 which in turn is dependent on the amount of vacuum introduced to the chamber. Thus, where the vehicle is braked and skids on a dry surface which requires a greater brake pressure to create a skid condition, lesser movement of piston 84 to the left, and hence less vacuum, will be required to relieve the brake pressure sufficiently to prevent the vehicle wheels from locking, this pressure being referred to as "release" pressure. Conversely, where the vehicle is braked on a slippery surface such as ice, a lesser brake pressure is required to create a skid condition. Hence the valve 126 must open suction passage 116 to the brake control conduit 104 for a longer initial period to provide greater vacuum to chamber 98 in order to move piston 84 sufficiently to the left so that sufficient relief of the brake pressure will be effected to prevent the wheels from locking.

In accordance with the invention after release pressure is attained, with corresponding movement of the piston then the governor causes the degree of vacuum in conduit 104 to modulate, which modulates the brake pressure through a narrow range of intermediate pressures above and below the release pressure, without ever restoring the normal, higher brake pressure until the skid condition ends.

To thus operate the valve, the upper extremity of valve 126 (FIG. 2) is provided with a reduced portion 136 that extends upwardly through partition 128, said portion 136 having a pin 138 extending therethrough to which is attached a circular projection 140, it being seen that as a longitudinal thrust is exerted against projection 140, the valve 126 will be caused to rotate.

The means for controlling movement of valve 126; namely, the skid-sensing and governor control means and the drive means therefor, will now be described. Referring to FIG. 4, skid-sensing and governor control means is designated generally at 24, and the drive means therefor is designated generally at 26. Referring first to the latter, the vehicle drive shaft is shown at 142, it being understood that the drive shaft is directly connected to the wheels of the vehicle (not shown) whereupon when the vehicle wheels lock, the drive shaft also locks. The drive shaft drivingly engages speedometer gear 144, which in turn is fixed to shaft 146, which in turn is drivingly connected to shaft 148 by means of a coupling shown at 150, said shaft 148 connecting with speedometer cable 152. Gear box 154 through which shaft 148 paves and in which the shaft 148 is suitably journaled, houses drivingly engaged bevel gears 156, 158, it being understood that bevel gear 156 is keyed to shaft 148 and bevel gear 158 is keyed to shaft 160, whereupon rotation of shaft 148, transmitted thereto by the vehicle drive shaft 142, is transmitted to shaft 160. Shaft 160, in turn, is drivingly interconnected, as at 162, to flexible shaft 164, said flexible shaft being connected, as at 166, to the unit 24, and said flexible shaft being drivingly interconnected with a shaft 168 which has fixed thereto a drive gear 170. It will therefore be seen that the gear 170 is drivingly interconnected with the vehicle drive shaft 142, which in turn is connected to the vehicle wheels. Thus, rotation of the vehicle wheels will cause corresponding rotation of gear 170, and, conversely, sudden slowing of the vehicle wheels, such as would occur where the vehicle approaches a skid condition by the operator applying more brake pressure than is required for a particular road surface, will cause not only the main drive shaft 142 to suddenly slow, but also drive gear 170. Gear box 154, and a lapior 172, by means of which the gear box is connected to the engine housing 174, comprise an assembly which may be easily and readily adapted to a conventional vehicle for driving the sensing and governor control means now to be described.

The unit 24 (FIGS. 1, 4) comprises a molded plastic housing 176 having a pair of spaced partitions 178, 180 therein defining chambers 182, 184 and 186. A solenoid 188 is secured to housing 176 adjacent chamber 182 by any suitable means, the solenoid 188 having a plunger 190 with a reduced extension 192 resiliently urged into chamber 182 by means of spring 194. When solenoid 188 is not energized, spring 194 bears against flange 196 affixed to plunger 190 to resiliently urge extension 192 into chamber 182. Suitable stop means 198 mounted on the interior of chamber 182 engage flange 196 to limit resilient axial movement of plunger 190 and extension 192 at a predetermined point, for reasons hereinafter to be explained more fully. Journaled in the partitions 178 and 180 is a pair of aligned shafts 200 and 202, respectively. Shaft 202 is provided with an enlarged portion 204 having an internal bore for slidably receiving in telescoping relation a reduced extension 206 of shaft 200. Attached to shafts 200 and 202 is a governor assembly comprising a plurality of weights 208, each pivotally connected to a pair of links 210, which links in turn are pivotally connected to arms 212. The arms 212 located on one side of the weights 208 are affixed to shaft 200 as at 214, while the arms on the other side of the weights are affixed to shaft 202 as at 216. As hereinbefore pointed out, shaft 202 is journaled for rotation in partition 180 but is incapable of longitudinal movement. Shaft 200, on the other hand, is drivingly engaged with shaft 202 so as to rotate therewith, but said shaft 200 is axially slidable with respect to the said shaft 202. Since the governor assembly is affixed on one side to shaft 202 and on the other side to shaft 200, it will be seen that the speed of rotation of the shafts will determine their longitudinal position relative to each other. Spring 218 resiliently urges the governor assembly to its collapsed position wherein shafts 200 and 202 are axially extended with respect to each other, but as the rotational speed of shafts 200 and 202 increases, centrifugal force urges the weights 208 outwardly, thus moving shaft 200 toward the right, viewing FIG. 4, against the action of spring 218.

Fixed to shaft 200 at the extremity thereof located in chamber 182 is a spool member 220, which spool member is in engagement with projection 140 carried by the reduced upper extension 136 of rotary valve 126. Thus, axial movement of shaft 200 causes like movement of the spool 220 which in turn carries therewith projection 140 captured between the opposed walls of the spool to thereby impart rotary movement to valve 126.

[R 132]

The means for imparting rotational movement to shafts 200 and 202 and the governor assembly associated therewith comprises a cam gear 222 (FIGS. 4, 5 and 5A), which cam gear is part of the drive train, in driven engagement with gear 170. The cam gear 222 is mounted

A-11

on shaft 202 and is located in chamber 186. The cam gear is slidably mounted on shaft 202 and is in driving engagement therewith by means now to be described. A recess 224 having inclined or helical surface 226 is provided at the end of the cam gear adjacent partition 180, and a projection or pin 228, carried by shaft 202, extends into said recess in engagement with the cam surface 226. At either end of the recess is a stop surface, at the deeper end stop surface 227, adapted to engage pin 228 for accelerating the governor and at the shallower end stop surface 225 for engaging pin 220 to decelerate the governor. A leaf spring 230 mounted to the housing 176 by any suitable means engages a button 232 which is press fitted into the central bore of cam gear 222 to normally urge the latter axially toward partition 180, holding pin 228 against accelerating stop surface 227. However, when rotation of drive gear 170 and cam gear 222 is suddenly slowed, as by sudden slowing of the vehicle wheels upon the presence of a skid condition, the rotational inertia of shaft 202, especially due to the governor weights 208, causes shaft 202 to turn ahead of gear 222, causing pin 228 to leave stop surface 227 and move to stop surface 225. This slides gear 222 on shaft 202 in a direction away from partition 180 to activate governor control.

It is important to note that solenoid spring 194 is stronger than governor spring 218, whereupon when solenoid 188 is not energized, plunger extension 192 bears against spool 220 to restrain same in the position illustrated in FIG. 4 wherein the rotary valve 126 is in the position illustrated in FIG. 2, namely, the position where atmosphere is free to pass through the valve to conduit 104 and then to chamber 98 and wherein at the same time suction from the intake manifold is blocked from communication with conduit 104. This is the normal operating condition of the system wherein the balanced pressure on opposite sides of actuator piston 84 enables spring 100 to position piston 84 and piston 68 as illustrated in FIG. 2. In this position, ball valve 64 is unseated to allow fluid pressure to pass directly to the brake line whereupon operation of the brakes is under direct control of brake pedal 12. This condition will remain so long as solenoid 188 (FIG. 4) is not energized. Energization of solenoid 188 is accomplished in the following manner. As previously explained, sudden slowing of gear 170 due to sudden slowing of the vehicle wheels as a result of a skid condition causes cam gear 222 (FIGS. 4, 5, 5A) to move axially on shaft 202 away from partition 180 against the action of spring 230. This movement is sufficient to cause actuation of a switch 234 suitably mounted in chamber 186. At the same time, the initial movement of the brake pedal and the resultant increase in fluid pressure in the system, causes hydraulic switch 18 (FIG. 2) to become closed. Hydraulic switch 18 is fully disclosed and described in copending U.S. patent application Ser. No. 203,075, filed June 18, 1962. Basically, switch 18 comprises piston 236 which has connected thereto at its upper end a metallic contact cup 238. Cup 238 is adapted to bridge contacts 240 and 242 but is normally maintained spaced therefrom by spring 244. An adjusting screw 246 is provided by means of which the tension of spring 244 may be varied, thus enabling the switch 18 to be preadjusted whereby a predetermined fluid pressure, e.g. 120–125 p.s.i., will cause piston 236 to move against the action of spring 244 sufficiently to bridge the contacts 240, 242. Actuation of switch 18 in the aforedescribed manner enables current to flow from battery 248 through contact 242, contact cup 238, and contact 240 to line 250 to the solenoid coil positive terminal 252 (FIG. 4). The voltage is applied through the solenoid coil 254 and then through line 256 to terminal 258 on switch 234. When switch 234 is open, the circuit to ground is not complete, and solenoid 188 will not be energized. However, upon actuation of switch 234 in the manner aforedescribed, the circuit to ground is completed through terminal 260, line 262 and ground connection 264. It is important to note that the circuit is such that although it is essential for hydraulic pressure switch 18 to be closed in order for solenoid 188 to be energized, closing of switch 18 alone is not sufficient, but rather switch 234 must also be actuated in order to complete the circuit. This is important because under normal operating conditions of the system sufficient pressure will normally be introduced to switch 18 by the foot pedal to actuate same, but it is essential that solenoid 188 not be energized under such normal conditions.

Energization of solenoid 188 accomplished by rightward movement of the cam gear (FIG. 5) closing switch 234, causes plunger 190, 192 to be retracted against the action of spring 194, thus freeing the shaft 200 and spool 220 for axial movement under the influence of the governor assembly. Therefore, the cam gear operating in response to the inertia of the governor and the solenoid operated plunger together can be regarded as an inertia-responsive means for initiating the action of the governor.

As soon as the solenoid plunger has been retracted, due to the sudden slowing at the commencement of a skid condition, the governor assembly takes over control and, as it is stopped by stop surface 225 of the cam gear, spring 218 will cause the governor assembly to commence to collapse, thus moving shaft 200 and spool 220 axially to the left, when viewing FIG. 4. This movement of spool 220 causes corresponding rotary movement of valve 126, thus shutting off the passage of atmosphere to brake control conduit 104 and simultaneously effecting communication between vacuum passage 119 and conduit 104. This results in suction being introduced to chamber 98 which in turn overcomes the action of spring 100 to cause pistons 84 and 68 to move to the left, viewing FIG. 2. This movement of piston 68 enables ball valve 64 to close due to the action of spring 62, thus preventing the introduction of further fluid pressure to the system via brake pedal 12. Further leftward movement of piston 68 enables the fluid in lines 78 and 80 to back up, thereby relieving the pressure until the vehicle brakes begin turning, the duration that the suction is applied, and hence the degree of vacuum and the amount of pressure relief depending on the slipperiness of the road. As soon as the brake release pressure is achieved, the vehicle wheels commence to rotate, whereby drive shaft 142 through the aforedescribed gearing once again causes gears 170 and 222 to rotate, it being apparent that this renewed rotation of shafts 200 and 202 will cause the governor assembly to once again turn, and due to the centrifugal force created, to retract shaft 200 and spool 220 to once again rotate valve 126 to the positions illustrated in FIGS. 2 and 4, where once again atmosphere is connected to chamber 98, thus enabling brake pressure to be restored.

But, it is very important for my present invention that the solenoid is not de-energized and the governor returned to the restraint of the inertia-responsive device. Rather, the governor remains free to act. It leaves the valve 126 open to atmosphere 118 for an instant until the degree of vacuum is lessened enough to cause slight rightward movement of the piston 84 to cause the brake pressure to slightly exceed release pressure and a skid again commences. Again the governor is slowed by the drive train and again it opens the valve 126 to suction 116, and this cycle repeats again and again in an extremely rapid hunting or modulating action with the gas pressure in the conduit 104 never reaching either amtospheric or engine vacuum level, but rather modulates at intermediate levels. In dependent fashion, the hydraulic brake pressure modulates narrowly about the release pressure as a mean, without returning to normal pressure. When the skid condition ends, the governor opers the valve continually to atmosphere and pistons 84 and 86 move fully to the right to once again unseat isolation valve 64 and return normal brake operation. The faster the vehicle travels, the faster does this action occur, but the action is sufficiently fast down to speeds on the order of 10 m.p.h. and even lower, to rapidly pump and release the brakes. It is another very

important aspect of the invention that the governor relinquishes control of the brake pressure before the vehicle stops.

In order to effectively carry out this modulating action, I have found it to be critical, in the preferred construction, that the solenoid 188 remain energized or that the plunger in some other way remains retracted until the vehicle slows to a predetermined slow speed, e.g. 5 or 10 m.p.h., depending on the vehicle. Since closing of switch 234 to complete the circuit to ground that energizes solenoid 188 is only momentary, holding means are provided for maintaining the solenoid energized until hydraulic pressure switch 18 opens, it being understood that switch 18 is preset to open only when fluid pressure in the system falls below the minimum value possible to achieve a skid condition, e.g. set 85-90 p.s.i. produced by the governor at 5 or 10 m.p.h.

The aforesaid holding means for the solenoid comprise a terminal 266 having a connection to ground as at 268, which terminal is engaged by plunger 190 when the latter is retracted in order to complete the circuit to ground independent of switch 234. Thus, although closing of switches 18 and 234 is essential in order to energize solenoid 188, once the solenoid has been energized and its plunger retracted, switch 234 may be opened without de-energizing the solenoid, and the solenoid will remain energized until switch 18 opens.

As hereinbefore stated, it will be obvious that if switch 18 were not utilized, then there would be no means present for insuring de-energization of the solenoid once the condition has been reached where a skid is no longer possible, it being obvious that if the solenoid were still energized at such low speeds, the vehicle would be without effective brakes, since the governor assembly would not exert sufficient centrifugal force to overcome the action of spring 213 and move shaft 200 and spool 220 to the rightward position (FIG. 4) wherein valve 126 enables the brakes to be controlled by pedal 12.

It is possible for the reset device to take some other form, such as a pendulum device or a vehicle inertia memory system that can detect the slow speed of the vehicle, but brake pressure-sensitive devices, and particularly hydraulic-electric switches have important advantages in the system, particularly since they can respond whenever the skid condition has passed, regardless of the speed of the car, to enable normal operation, while offering low speed protection against the governor's cutting off the brakes completely. The adjustment of the pressure level to which the device responds can be adjusted according to the wishes of the operator and the type of road conditions to be expected. But, in fact, a single setting, below that at which skidding on ice occurs, which is determinable for any given vehicle, is advantageously employed to give anti-skid protection under virtually all conditions.

Any tendency for the unit 24 to erroneously sense a skid condition and actuate switch 234 in response to a rapid deceleration is overcome by use of properly calibrated weights 208 and a properly tensioned spring 230. In addition, I have found that an erroneous sensing is most likely to occur where there is a rapid acceleration of the drive shaft quickly followed by a rapid deceleration. The frictional brake or drag that is resiliently exerted on spool 220 by plunger 190 helps to overcome this problem since this action tends to reduce the torque applied to shafts 200 and 202 by the governor assembly. It has been found, however, that at high speeds the frictional engagement between plunger 190 and spool 220 results in undue wear of the parts. Thereof, plunger 190 is assisted by spring 230, and the plunger is disengaged at high speeds. To this end, stop means 198 engages flange 196 so as to limit the outward movement of plunger 190 whereupon no engagement exists between plunger 190 and spool 220 at relatively high speeds. I have realized that the crucial problem of rapid acceleration followed by rapid deceleration occurs at low speeds in the low gear range with conventional automobiles, and I have, therefore, found that it is not necessary to have plunger 190 exert a frictional drag on spool 220 and shaft 200 at relatively high speeds.

Although the operation of my invention is thought to be clear from the foregoing description, a brief resume of the operation will now be given. Under normal operating conditions, solenoid 188 is de-energized whereby the spring-loaded solenoid plunger maintains the skid-sensing and control unit inoperative. The de-energized solenoid further insures that rotary valve 126 is in the position wherein atmosphere is introduced to chamber 98. Since chamber 96 is also open to atmosphere, it follows that there is a pressure balance on each side of large piston 84 thus enabling spring 100 to take over and move the piston 84 to the position illustrated in FIG. 2. In this position, piston 68, which is connected to piston 84 and moves therewith, engages ball valve 64 so as to unseat same against the action of spring 62. With ball valve 64 so opened, fluid pumped from master cylinder 14 by brake pedal 12 is free to pass directly to hydraulic lines 78 and 80 to actuate the vehicle brakes. The pressure-sensitive switch is adapted to be closed by a low level of brake pressure, e.g. 120–125 p.s.i., placing the anti-skid unit into readiness for operation.

Upon encountering a skid condition, i.e., a condition wherein the vehicle operator applies more brake pressure than is required for a particular road surface, the vehicle wheels slow suddenly. This causes corresponding deceleration of drive shaft 142, and through suitable gearing, drive gear 170 and cam gear 222 also slow abruptly. The inertia of the governor assembly causes the gear 222 to move longitudinally by the cam surface aforedescribed, said longitudinal movement of gear 222 causing switch 234 to be closed which results in energization of solenoid 188 and the retraction of solenoid plunger 190. The second switch or terminal 266 is engaged upon retraction of the solenoid plunger to maintain the solenoid energized until switch 18 opens, even though switch 234 has now opened. Switch 18 is preset, e.g. at 35–90 p.s.i. to be opened at a brake pressure below that at which skids can occur, e.g. 100–150 p.s.i. for ice, whereupon solenoid 188 will remain energized until possibility of skidding no longer exists, and the solenoid is then de-energized to restore normal foot brake action before the governor has a chance ever to totally relieve the brakes.

Regarding the operation of the governor, once the solenoid 188 has been energized, the governor control unit takes over. More specifically, when a skid condition is approached, the sudden slowing of the vehicle wheels causes the governor assembly to collapse under the action of spring 218, thus moving shaft 200 and spool 220 to rotate valve 126, this movement now being permitted due to retraction of plunger 190. Rotation of valve 126 blocks the flow of atmosphere to chamber 98 and simultaneously allows the introduction of a vacuum to said chamber. The introduction of vacuum overcomes spring 100, thus resulting in movement of pistons 84 and 68 to the left, viewing FIG. 2. This movement closes isolation valve 64, thus preventing the application of further fluid pressure by brake pedal 12. As the valve remains in this position, the degree of vacuum increases, causing further leftward movement of piston 68 (FIG. 3), so that pressure in lines 78 and 80 and the brakes are relieved. A point is reached when the brakes are relieved sufficiently to allow the wheels to speed up from their slowed condition, the degree of relief required depending on the degree of slipperiness of the road. Then shafts 200 and 202 speed up once again, whereby the governor assembly retracts shaft 200 and spool 220 to once again rotate valve 126 to the position where atmosphere is introduced to chamber 98 and the piston 68 moves to the right and increases the brake pressure, until a part is reached where the wheels slow again and the cycle repeats. This action continues in a hunting manner so long as

A-13

the vehicle is in an incipient skid, thus insuring that maximum brake pressure is continually applied to the wheel brakes short of pressure that would cause locking of the wheels. Once the brake pedal is released or the brake pressure in the system has dropped below the minimum possible value to create a skid, hydraulic pressure switch 18 breaks the circuit to solenoid 188, whereupon the latter becomes de-energized and the brakes once again become under complete control of the operator.

It is important to note that although loss of vacuum in the vehicle system will render the anti-skid means ineffective, said loss of vacuum will in no way affect normal operation of the vehicle brakes. Also, it is important to note that this system can be used with foot pedal controlled brakes of both the powered and nonpowered types.

While a spring-loaded fly ball type of governor has been illustrated, and is presently preferred, the broad concept of the invention include the use of other governors, all rotary weight governors, such as gravity loaded fly ball, centrifugal shaft and inertial shaft governors, as well as governors that operate through electrical action.

The concepts are likewise applicable to other brake systems including air brakes in which valve 126 could directly modulate air brake pressure. Likewise it is possible to separate the governor from the valve, let the governor actuate a switch and let the valve be actuated by a solenoid responsive to the condition of the switch.

While use with engine vacuum is very efficient and inexpensive, and unlike previous systems I have proposed, does not cause the engine to run roughly due to loss of vacuum, the invention is applicable to other sources of pressure differential, incompressible fluid as well as gaseous fluid and numerous aspects of the invention are useful with nonfluid types of brake systems.

Referring now to FIGS. 7 and 8, a slightly different form of my invention is disclosed in which the relieving device is incorporated as an integral part of a power brake unit. The system generally comprises a brake pedal 300, a master cylinder 302, an accumulator 304, a safety valve 306, a hydraulic pressure switch 308, a power brake control unit 310, and an anti-skid unit 312.

Actuation of brake pedal 300 operates piston 314 to pump fluid from cylinder 316 to conduit 315. Master cylinder 302 further comprises a fluid reservoir 320 communicating with cylinder 316 by means of passageway 322. A conduit 324 extends from reservoir 320, the function of which will hereinafter be described. Accumulator 304 is in communication with conduit 318 and comprises a spring loaded piston 326 and acts as a cushion and shock absorber for the fluid system where variations in fluid pressure occur.

During normal operation of the vehicle with which the power brake unit is associated, and with the brakes in their non-actuated position, the power brake unit 310 is in the position illustrated in FIG. 8. In this position, chambers 328 and 330 of cylinder 332 are both under vacuum, thereby equalizing the pressure on opposite sides of piston 334. This enables spring 336 to urge the piston 334 to the leftward position illustrated, said piston 334 being connected by means of rod 338 to a brake actuating piston 340. Piston 340 is slidably mounted in cylinder 342, said cylinder having an outlet conduit 344 leading to safety valve 306. Conduit 344 is also in communication with hydraulic pressure switch 308.

A supply of hydraulic fluid is located in cylinder 342 whereupon movement of piston 334 against the action of spring 336, and corresponding movement of piston 340 will force fluid from cylinder 342 under pressure through conduit 344 and with valve 306 in the position illustrated in FIG. 8 to conduit 346 and then to hydraulic lines 348 which lead to the wheel cylinders (not shown) of the vehicle's braking system. Thus it will be seen that movement of pistons 334 and 340 to the right, viewing FIG. 8, will cause operation of the vehicle brakes.

As hereinbefore indicated, under normal operating conditions of the vehicle, and with the brakes not applied, pistons 334 and 340 are in the position illustrated in FIG. 8 due to the fact that a vacuum exists in both chambers 328 and 330. More specifically, suction from the intake manifold 360 of the vehicle passes through conduit 352 into chamber 330 and then through passageway 354, through openings 356 in diaphragm 358 to conduit 360, through rotary valve 362 of the anti-skid unit 312, through conduit 364 and then to chamber 328. The control unit generally shown at 366 which forms a part of power brake unit 310 is of conventional form and comprises the aforesaid diaphragm 358, hydraulically movable by means of piston 368 to a closed position wherein the diaphragm engages the fixed seat 370 to block communication between passage 354 and conduit 360. The piston 368 also controls movement of poppet valve 372 normally maintained closed by spring 374. Spring 376 normally urges diaphragm 358 to its open or unseated position, as illustrated in FIG. 8. An atmosphere intake is located at 378, and introduction of atmosphere into the system is controlled by valve 372 in a manner now to be described.

As above indicated, with the parts in the positions illustrated in FIG. 8, the brakes of the vehicle are nonoperative due to the fact that suction is free to circulate through conduit 352 to chamber 330 and then through control unit 366 to conduit 360, through rotary valve 362 to conduit 364 and then to chamber 328. With vacuum on both sides of piston 334, spring 336 maintains the piston 334 and the connected brake actuating piston 340 in brake release position. Upon actuation of brake pedal 300 by the operator, pressurised fluid passes through conduit 318 to conduit 380. With the safety valve 306 in the position illustrated, flow of the fluid into the valve is blocked, and hence the brake fluid is forced to flow through conduit 380 into the brake control unit 366. None of the fluid from the pedal is allowed to reach the brake actuators at 348.

Introduction of the pressurized fluid to the brake control unit 366 causes actuation of piston 368 to move diaphragm 358 to its closed or seated position and to simultaneously open poppet valve 372 in a conventional manner. This movement blocks communication between chamber 330 and conduit 360 and simultaneously allows air to enter through inlet 378 through the now open valve 372 to conduit 360. The atmosphere circulates around conduit 360 through valve 362 to conduit 364 and then the chamber 328. The introduction of atmospheric pressure to chamber 328 creates a pressure differential which overcomes spring 336 and moves piston 334 and piston 340 to brake actuating position. More specifically, the movement of piston 340 in cylinder 342 forces the brake fluid through conduit 344 and safety valve 306 to conduit 346 and hydraulic brake lines 348 to actuate the vehicle brakes in known fashion.

In order to insure that there is always an adequate supply of brake fluid in cylinder 342, conduit 324 connects fluid reservoir 320 to the cylinder 342, it being important to note that the inlet 382 to the cylinder 342 is located behind the forward portion of piston 340. Piston 340 is provided with a one-way valve 384 which enables fluid to pass through the piston from left to right, viewing FIG. 8, but which blocks flow of fluid through the piston from right to left. Thus, during operation of the piston 340, the suction created thereby in cylinder 342 sucks fluid through conduit 324 from reservoir 320 into cylinder 342 on the rear side of piston 340. During the return stroke of piston 340, the valve 384 allows fluid to pass through the piston, thereby insuring that there is always a full supply of fluid in the cylinder for brake actuation.

Since the structure and operation of hydraulic pressure switch 306 and anti-skid unit 312 are identical to that already described in connection with the first form of my invention, it is not thought that further description is

necessary. It will be noted, however, that where the operator applies more brake pressure than is required for a particular road surfaces, the vehicle wheels will lock, whereby the same structure and operational sequence will cause rotary valve 362 to be moved to a position wherein conduit 360 becomes blocked and conduit 352A becomes open to allow suction from manifold 350 to be introduced through conduit 364 to chamber 328, whereupon spring 336 will once again take over to release the brakes. The same modulating action as aforedescribed will take place until hydraulic pressure switch 308 eventually renders the anti-skid inoperative.

In accordance with my invention it is crucial that the entire brake pressure be controlled by the anti-skid unit and that no fluid be conducted directly from the foot pedal to the wheels. Means are provided to insure that brake pressure will not be lost should there be a loss of suction. This is accomplished by safety valve 306. More specifically, conduit 352D is connected to the suction conduit 352 whereupon as long as proper suction exists in the system, piston 386 is maintained in the position illustrated in FIG. 8 against the action of spring 388. In this position, conduit 344 is in communication with conduit 346, but conduit 360 is blocked at its extremity adjacent the safety valve. Should suction be lost in the system, spring 388 will become effective to move piston 386 upwardly, thereby blocking the communication between conduits 344 and 346 and at the same time providing communication between conduit 320 and conduit 346. With the safety valve in this position, the brakes are directly controlled by operation of pedal 300 since the entire power unit is now bypassed.

A one-way check valve 390 is located in conduit 352 adjacent the intake manifold 350 since without same backfire of the vehicle engine would cause an explosive pressure to be introduced to the power unit, which would be undesirable for obvious reasons.

Referring once again to FIG. 4, it will be noted that should the vehicle move in reverse, the direction of rotation of drive shaft 142 will likewise be in reverse, thus causing reverse rotation of flexible shaft 164 and shaft 168. Reverse rotation of shaft 168 will, in turn, cause reverse rotation of drive gear 170 and cam gear 222, causing pin 228 to leave stop surface 227 and move toward stop surface 225, which, as previously described, causes gear 222 to slide on shaft 202 in a direction away from partition 180 to close switch 234 and thus activate the governor control and anti-skid means. Even though it is possible that very slow reverse movement of the vehicle might not be sufficient to cause movement of cam gear 222 to activate the governor control, the fact remains that there is always the possibility and even likelihood that reverse movement of the vehicle will activate the governor control even though no skid condition exists. Since there is no practical need for any anti-skid means when the vehicle is moving in reverse, and since the activation of these means when not needed might even result in the loss of some stopping distance, it has been found desirable to provide means for rendering the governor control and anti-skid ineffective and inoperative when the vehicle moves in reverse.

Referring to FIGS. 9 through 12, a somewhat modified anti-skid unit is shown generally at 400. Unit 400 is basically the same as skid-sensing and control means 24 hereinbefore described except that a reverse cut-off switch has been incorporated in the unit to prevent energization of solenoid 188 when the vehicle drive shaft is in reverse and flexible shaft 164 correspondingly rotates in a reverse direction. The reverse cut-off switch, shown generally at 402 (FIG. 10) comprises a shaft 404 slidably coupled to shaft 164 as at 406, in the same manner that shaft 168 was drivingly engaged to flexible shaft 164. Shaft 404, which is constructed of any electrically conductive metal, is journalled in bore 408, said bore having an enlarged end portion 410, it being understood that the larger diameter of portion 410 results in the presence of an annular shoulder 412 at the extremity of bore 404. Slidably mounted in portion 410 is a contact button 414, said button being resiliently urged toward bore 404 by means of spring 416. The opposite end of spring 416 resiliently engages a contact cup 418 having a terminal 420 extending radially therefrom.

Adjacent its opposite extremity, shaft 404 has fixedly mounted thereon the afore-described drive gear 170, said gear meshing with cam gear 222, all in the manner hereinbefore described. A spring 422 engages washer 424 to normally urge shaft 404 to the left when viewing FIGS. 9 and 10, thus causing the end of shaft 404 to extend into enlarged portion 410 and, therefore, into engagement with contact button 414, as illustrated in FIG. 9. Loosely mounted on shaft 404 is a reverse switch cam 426 comprising a circular plate 428 having a spiral cam portion 430 mounted thereon, and further having an outwardly extending pin 432 located adjacent the end of cam track 430. A cam pin 434 extends radially from shaft 404 and is adapted to cooperate with the spiral cam track 430 to determine the axial position of shaft 404. Expressed differently, when shaft 404 is rotating in a counterclockwise direction when viewing FIG. 12, cam pin 434 will engage the stop pin 432 at the low point on the spiral track 430. With the parts in this position, shaft 404 will assume the position illustrated in FIG. 9 wherein the extremity of the shaft is in engagement with contact button 412, it being understood that spring 422 is somewhat stronger than spring 416, whereupon the extremity of shaft 404 will actually enter into enlarged portion 410. Upon clockwise rotation of shaft 404, pin 434 will ride up the spiral cam track 430 until it reaches the high end of said track and engages the opposite side of stop pin 432, as illustrated in FIG. 10. In this position, shaft 404 has been moved to the right (when viewing FIG. 10) against the action of spring 422 sufficiently for the end of said shaft to become completely withdrawn from enlarged portion 410. Since the annular shoulder 412 prevents the contact button 414 from moving out of enlarged portion 410, it follows that the end of shaft 404 becomes disengaged from contact button 414, as clearly illustrated in FIG. 10. Also mounted on shaft 404 is a washer 436 having a radially extending contact arm 438, the purpose of which will hereinafter be described. As will be seen most clearly in FIG. 10, the washer 436 is mounted on shaft 404 adjacent the flat rear surface of cam 426, it being understood that shaft 404 may freely rotate within washer 436. A cam thrust washer 440 comprising a peripheral ring portion 442 and bent marginal lugs 444 resiliently engages the opposite face 428 of cam 426, whereupon to resiliently urge cam 426 into engagement with washer 436 and at the same time to impart a sufficient frictional drag on cam 426 so that movement of shaft 404 will not impart corresponding rotary movement to the cam until pin 434 moves into engagement with stop pin 432. The thrust washer 440 has a radially extending spring arm 446 that is secured to the housing 176 by any suitable means, such as by having the end of the spring arm clamped between adjacent portions of the housing, as illustrated in FIGS. 9 and 10.

The operation of reverse switch 402 is as follows. Assuming that shaft 404 is being rotated in a counterclockwise direction, which for purposes of this description corresponds to forward movement of the vehicle, the switch will, as aforestated, assume the position illustrated in FIG. 9 wherein shaft 404 is making engagement with contact button 412. With the parts in this position, and assuming that a skid condition commences to exist, causing cam gear 222 to close switch 234, current will flow through line 262 to terminal 420 through contact cup 418, spring 416, contact button 414, and then to shaft 404, which as previously described, is in engagement with contact button 414. Shaft 404 is in turn in electrical engagement with washer 426 and its radially extending ter-

A-15

minal 436, both directly and through the engagement of pin 434, which in turn engages cam 426, which in turn bears against washer 416. Thus, the flow of current is through terminal arm 438 and then to line 262A, which connects to ground as at 264. This, along with line 256, completes the circuit to solenoid 188 in order to energize same and render the governor control effective, all in a manner hereinbefore described. On the other hand, should the vehicle move into reverse, thus resulting in clockwise rotation of shaft 404, cam 426 will cause the shaft 404 to retract and become disengaged from contact button 414, as illustrated in FIG. 10, thus interrupting the connection to ground and preventing energization of solenoid 188. It will thus be seen that whenever the vehicle and its drive shaft moves in reverse, the reverse cut-off switch 402 will automatically prevent the skid sensing and control means and the governor control from coming into play. Thus, the vehicle brakes will always be under normal and direct control by the operator whenever the vehicle is moving in reverse.

While there is shown and described herein certain specific structure embodying the invention, it will be manifest to those skilled in the art that various modifications and rearrangements of the parts may be made without departing from the spirit and scope of the underlying inventive concept and that the same is not limited to the particular forms herein shown and described.

What is claimed is:

1. Acceleration responsive means for a vehicle wheel anti-skid system in a vehicle brake system having a fluid source, a vehicle wheel brake operating actuator cylinder in fluid communication with said fluid source and operator actuated means for applying fluid pressure to said vehicle wheel brake operating actuator cylinder, said vehicle wheel anti-skid system comprising said acceleration responsive means which senses a predetermined deceleration of the vehicle wheel, means actuated by said acceleration responsive means for alternately applying and relieving the fluid pressure applied to the vehicle wheel brake operating actuator cylinder when said predetermined deceleration of the vehicle wheel is sensed by said acceleration responsive means, and means for controlling said means for alternately applying and relieving the fluid pressure, said acceleration responsive means comprising a governor assembly, a rotatable shaft operatively connected to said governor assembly to rotate the governor assembly, a cam gear mounted on said shaft, means for operatively connecting said cam gear to said shaft so that said shaft may be driven in rotation by said cam gear when said cam gear is rotated, said cam gear being mounted for sliding movement endwise of said shaft, means for rotating said cam gear dependently with the speed of rotation of the vehicle wheel, means for sliding said cam gear endwise of said shaft upon a predetermined deceleration of the vehicle wheel, said cam gear being capable of actuating said control means, whereby said cam gear normally rotates said shaft which in turn rotates said governor assembly but upon attainment of a predetermined deceleration of the wheel said cam gear is moved endwise of said shaft temporarily disconnecting the driving relationship between the cam gear and the shaft and actuating said control means so that the fluid pressure applied to the vehicle wheel brake operating cylinder will be alternately applied and relieved.

2. Acceleration responsive means as set forth in claim 1 wherein said means for operatively connecting said cam gear to said shaft includes a pin secured to and extending radially of said shaft and means formed in said cam gear to engage said pin.

3. Acceleration responsive means as set forth in claim 2 wherein said means formed in said cam gear includes a recess in one end of said cam gear, a helical surface formed in said cam gear within the confines of said recess, a first stop surface at one end of said helical surface and a second stop surface at the other end of said helical surface, said pin being adapted to fit within said recess and contact said helical surface.

4. Acceleration responsive means as set forth in claim 3 including a spring finger mounted to bias said cam gear into engagement with said pin so that when said cam gear is rotated said pin engages said first stop surface thereby to rotate said shaft but upon attainment of the predetermined deceleration of the wheel said pin rotates relatively to said cam gear thereby to slide along said helical surface until said pin abuts said second surface thereby to slide said cam gear endwise of said shaft until the cam gear engages and actuates said control means.

References Cited

UNITED STATES PATENTS

2,163,731	6/1939	Hallot	188—181
2,964,048	12/1960	Mortimer	188—181 X
3,165,180	1/1965	Inderau	303—21 X

DUANE A. REGER, Primary Examiner

U.S. Cl. X.R.

188—181

APPENDIX "B"

[R 132]

M-44

WILLIAM E. HILL & COMPANY, INC.

MANAGEMENT CONSULTANTS

NEW YORK LONDON BRUSSELS

640 FIFTH AVENUE
NEW YORK 19
JUDSON 2-5959
CABLE: HILLNAMAG NEWYORK

December 14, 1964

Mr. Robert A. Kloby
Director of Forward Planning
The Singer Company
Elizabeth Plant
321 First Street
Elizabeth, New Jersey

Dear Mr. Kloby:

In accordance with your assignment, a preliminary survey of short-term prospects for the Perma anti-skid control has been completed. The following report summarizes the findings and conclusions of this survey, which were reviewed with you November 11 in Elizabeth.

Sincerely yours,

William E. Hill & Company

199

[R-132]

B-1

12/14/64

M-59

The Singer Company

PRELIMINARY MARKET SURVEY

PERMA ANTI-SKID CONTROL

The objective of this project has been to assist management in determining the short-term market prospects for the Perma anti-skid control. Although determination of sales potential was the principal objective, the issue of product performance arose during the course of the project as an important consideration, and the subject has been covered in the report.

Following orientation meetings with Singer and Perma management, the conduct of the survey included meetings with key industry sources such as automotive brake and safety engineers, auto manufacturer marketing personnel, fleet operators and safety engineers, a fleet operation consultant, specialty automotive part distributors, new-car dealers, and several Perma distributors.

The principal findings and conclusions resulting from this preliminary study are summarized below.

1. Automotive engineers have recognized for many years that it is possible and highly desirable to improve the braking operation by adding to the vehicle braking system a mechanism that

would sense an impending locked-wheel condition and prevent the brakes from coming to a completely locked condition. A system which could do this would allow the car to be stopped somewhat faster and give greater steering control in a panic stop situation. The Perma control is one of several systems that automotive engineers have evaluated in recent years in their search for a system which will give the desired improvement in braking performance at a reasonable price.

2. The Perma anti-skid control falls short of meeting requirements of automotive engineers, and does not provide the improvement possible in theory. The consensus of the many engineering tests that have been run on the unit indicate that the Perma control, as compared to a panic or locked-wheel stop, gives improved steering control, but requires a greater distance to come to a complete stop. The automotive brake and safety engineers who have reviewed its performance do not agree on the value of the Perma anti-skid control, and are about evenly divided on the issue. One group believes that it is of value in that most drivers cannot handle a skid situation adequately and that the added control of the car obtained is well worth the relatively small loss in stopping distance. The other group believes that no amount of increase in control justifies the increased stopping distance.

3. The user aftermarket represents the only apparent short-term opportunity for significant sales volume for the Perma anti-skid control. Prospects are indicated for a sales volume on the order of 100 thousand units during the next two years, depending on sales effort.

   a) The product, with its strong emotional appeal to safety, and with demonstrable characteristics, lends itself to a consumer-directed merchandizing effort. Typical of products of this type, sales volume will depend largely on the amount of promotional effort expended.

   b) The original-equipment market represents virtually no opportunity at this time for sales of the Perma control. In addition to the mixed opinion on its worth, this is because of the low value the automotive manufacturer places on safety equipment, considering the poor record of consumer acceptance for high-cost equipment such as the Perma control.

c) The prospects for significant sales to fleet markets are expected to be quite limited due to the highly cost-conscious nature of fleet operations. Most government fleets are subject to stringent budgetary controls with very little allowance for extras. Large professionally run private fleets subject their expenditures to careful cost analysis, and the anti-skid control can seldom be justified on a dollars and cents basis, considering the substantial investment cost in relation to reduction of accident cost.

4. To meet the sales volume which appears possible during the next two years, a strong promotional program aimed at the user aftermarket would be required.

a) An intensive promotional program would be needed, because the Perma anti-skid control is virtually unknown and would have to be introduced to the end-user. In addition sales would represent discretionary purchases (versus replacement parts sales) and the item is costly in relation to most other auto accessory purchases.

b) A program to sell the item successfully would likely depend heavily on "high-pressure" promotional methods which include a high sales and advertising cost per unit, sales practices capitalizing on a strong emotional appeal, and perhaps emphasizing strong "personal" selling.

c) Any one of a number of channels of distribution could be effective for this product, including new-car dealers, gas stations, specialty auto accessory stores and a direct selling organization. However, to meet the desired sales volume through any one of these channels, it appears that a supporting program of advertising, demonstrations and other promotional measures would be required.

5. If the Company becomes involved in a sales program directed to the user aftermarket, management will want to recognize the possible problems which might arise, and which have been encountered by other companies in similar situations. In particular, the following points might be considered.

a) Use of the Singer name both at dealer and user levels should be carefully controlled. This is essential to prevent misuse of the name in relation to extravagant product claims and also to prevent association in the user's mind with possible undesirable sales and promotional activities.

[R 132]

b) Management, of course, will want to determine the legal liability which could arise from accidents where it could be claimed that the anti-skid control did not function as represented or where it may have been installed incorrectly or become inoperative.

c) In light of Singer's dependence on an independent sales organization for marketing of the Perma control, management will want assurance that the program will not resort to the use of door-to-door sales organizations which would employ high-pressure salesmen. This in particular could result in problems possibly harmful to the Singer name and reputation.

d) The question of reliable repair service and replacement parts availability is an important one, and assurance of reliable resources in this respect will need to be considered.

The following section of this report summarizes in detail the findings of the survey.

[R 132]

B-5

The Singer Company

PRELIMINARY MARKET SURVEY

PERMA ANTI-SKID CONTROL

A. Product Description and Engineering Evaluation

1. For many years automotive engineers have recognized that it is desirable as well as possible to reduce stopping distance of a car in a panic stop by holding brakes steady just before a full locked-wheel condition and at the same time reduce the tendency for the car to spin. In recent years many of the automotive companies have evaluated systems which are able to make this improvement in braking performance at a justifiable price. The Perma anti-skid control is one of the devices which have been designed to make this improvement in braking performance. This control operates by quickly sensing a locked-wheel condition and momentarily reducing the brake line pressure to allow the wheel to rotate. The system cycles through this lock-roll-lock-roll condition about four times a second until the car comes to a halt.

   a) In theory, by holding the wheels at a 20 percent skid, or by allowing the motion of the car to come 20 percent from skidding and 80 percent from wheel rotation, the car can be brought to a stop faster and kept under better control than in the locked-wheel condition.

   b) The lack of stability, or the tendency for the car to swing around, is particularly serious in the case of Bendix-type brakes which are self-actuating and quite sensitive to the condition of brake lining and adjustment for balanced braking. Disk brakes, which several U.S. manufacturers are offering this year as optional equipment, operate on a somewhat different principle and do not have as great a problem in braking stability as self-actuating types.

   c) In addition to the evaluation made of the Perma anti-skid

control, automotive manufacturers have evaluated the Lockheed and Bendix systems. Also, there is a comparable system developed in Europe which was offered on the Jaguar auto as optional equipment. The Lockheed unit operates on the basis of a small flywheel backlash operating through a pneumatic system to reduce brake pressure; the French system is a mechanical system working on each wheel.

2. A number of engineering tests have been run on the Perma anti-skid control comparing its stopping performance in terms of stopping distance and stability with the operation of the car under locked-wheel conditions. The consensus of the tests is that the Perma control allows a car to be stopped under panic stop conditions with better control, but at the cost of greater stopping distance when compared to locked-wheel conditions. While this conclusion is definitely substantiated by most of the results, there is some variation between the test results. The results of tests run to date have been summarized in Exhibit 1.

   a) Exceptions to the above conclusions are as follows:

      (1) The test results of the Motor Vehicle Research group, which were sponsored by Perma, showed that under all road conditions use of the Perma anti-skid control allowed the car to stop significantly faster than under locked-wheel conditions.

      (2) In the Cadillac Division test, under glare ice road conditions the Perma control permitted the car to stop in slightly less distance than the locked-wheel situation.

      (3) The Ford tests showed that the car equipped with the Perma control took longer to stop and gave no significant improvement in stability.

   b) The extent of the testing performed in evaluating the control was reviewed with the auto manufacturers' engineers conducting the tests in most cases, and the amount of time and expense involved was considerable and results are considered to be sound.

3. There are two points of view among the engineers evaluating the Perma anti-skid control as to the value of a system which brings a car to a stop with better control but which requires greater

[R 132]

B-7

distance to stop; the engineers are almost evenly divided for and against use of such a system.

a) The General Motor Research Center, The Ford Advanced Design Group and Chrysler Brake Laboratory are against use of the control. They believe that nothing should be done to increase the stopping distance required under panic stop conditions, because the last ten feet may be the critical ones in a collision.

b) American Motors Safety Engineering and Cadillac Division Brake Design Group are in favor of the system. They believe that the average driver will not remember to pump his brakes under panic conditions and hence is much better off with the anti-skid control. He will have enough control to avoid most road obstructions and stay in a controlled path even though it takes him slightly longer to stop.

B. Possible Markets for Anti-Skid Systems

There are three distinct markets representing significant potential for products such as the Perma anti-skid control.

1. Original equipment manufacturers, represented by the major automotive companies, General Motors, Ford, Chrysler, and American Motors.

2. Fleets, including privately-owned fleets and government-operated vehicles.

3. The automotive user aftermarket, represented by the sales of parts and accessories after the car is purchased, and including accessories installed by the new-car dealer.

C. Market Characteristics and Requirements

Following is a summary of the key market requirements relating to automotive equipment such as the anti-skid system.

1. The automotive manufacturer has two essential requirements,

dependability and value. These requirements are reflected in the typical evaluation of a possible new device; first, assurance that the device is sound from an engineering point of view, and secondly, consideration as to profit, which is a function of user acceptance (in terms of the added price he is willing to pay) and the added cost to the manufacturer. Safety features have typically received low ratings in relation to these criteria.

a) The automobile companies are slow to accept new accessories because of the desire to thoroughly prove out any new device for reliability. For example, the power-braking system on the Ford, similar in complexity to the Perma anti-skid control, took over two years to develop even after the basic design was well established. All new accessory designs have hundreds of thousands of miles of testing before final acceptance. In this respect the statement was made by several of the auto companies that from a reliability point of view they believe the Perma anti-skid control is below their standards.

b) An example of the rather low rating that auto companies put on safety items is the case of dual brakes. This item has been put only on the Cadillac and Rambler; it permits partial brake operation even though a hydraulic line is broken. Although the cost is low, about $1.50 in manufacturing costs, other manufacturers have not added the device, primarily because they do not believe the consumer will recognize that amount of additional value.

c) While it is difficult to find a product which is exactly parallel to the anti-skid control, the record of seat belts probably comes closest. These cost in the $25 to $35 range during their first year. Through the 1950's American Motors was the only manufacturer to offer belts as an accessory, and although belts had unqualified support of safety organizations the company realized sales on under 1 percent of cars until the legislation of the 1960's.

2. The requirements of fleet markets in total center around cost consideration, particularly in the case of government and major fleet operations. The nature of these cost requirements are different, however, between the two major market segments.

a) The key characteristic of government fleet purchasing is the overwhelming concern with price. Virtually all purchasing of motor vehicles and accessories is subject to public bidding

and review. Hence, except where special equipment is required to accomplish a particular job, the government vehicle is strictly transportation and the cheapest equipment available is purchased.

(1) The Federal Government fleet has the most stringent financial limitation placed on it. All of their vehicles, with accessories, are purchased for under $1,500. This leaves no allowance for anything but the most necessary accessories. This ceiling has been set by law and there is no indication that it will be raised in the near future.

(2) The GSA, which purchases and operates the largest share of government vehicles, has shown interest in many new safety devices and has been discussing these devices with automotive companies. However, the agenda of their last meeting in Detroit this November did not include the anti-skid control, other devices being considered of higher priority.

(3) Smaller government fleets, such as local police vehicle fleets, have indicated interest in the anti-skid control. Where vehicle purchases are not subject to close public scrutiny and key persons influencing the sale may have a freer hand in choosing the equipment, the cost factor may be secondary. A number of these smaller fleets have shown initial interest in the system and the Perma control has been installed in a few trial cars.

b) The principal concern of the commercial fleet is cost of operations. These cost considerations fall into two areas: first, the cost of depreciation (the relationship between purchase price and eventual resale on the used-car market) as it affects the car and the accessory equipment, and second, the cost of operation including fuel, maintenance, insurance repairs, etc. In the large professionally managed fleets cost is the primary concern, although allowance is often given to match fleet equipment with the personally owned vehicle the driver is accustomed to.

(1) The large fleet operator looks at his costs as divided quite equally into three parts -- depreciation, direct operating costs and all other, including the costs of accidents. Of the total cost of operation the direct cost of accident (the sum of insurance and non-insured accident costs)

represents a minor 9 percent in the average business fleet. With this relatively low base, very little cost for accessory equipment can be justified in an attempt to reduce it.

(2) The costs of accidents are normally 85 percent covered by insurance, and unlike private auto insurance, the premium rate is negotiated annually with the underwriter. The rate varies from fleet to fleet, but is nearly always based on the accident experience of the previous year. Hence the large fleet operator will only consider installing a safety device when it can be shown that it will reduce the accident cost in relation to its cost.

(3) The fleet owner often will purchase accessories which have value from an employee relations point of view. The rule of thumb on this type of purchase usually is to give the driver of a company car equipment he has come to accept in his own car. Hence, after power brakes rose to a rate in new car installation of around 50 percent the large fleets started to purchase cars with power brakes. The same situation has occurred with the automatic transmission and the 8-cylinder engine. On this basis the fleet operator would not purchase a new accessory until after it had received fairly wide consumer acceptance.

(4) The cost of depreciation over the time that the fleet holds a car, usually two to four years, is a factor in choice of accessories. The fleet operator recognizes that the accessories depreciate in market value much faster than the car itself. In fact, only five accessories are recognized as having resale value; these are automatic transmission, radio, power brakes and steering and air conditioning. All others, including Perma anti-skid control, are nearly valueless on the used-car market. This fast rate of market depreciation would be a further barrier to sales in this market.

(5) In addition to the large professionally managed fleets there are, of course, small fleets that are not subject to close cost control. These fleets are often run by one man with a relatively free hand over purchases, and who may recognize unusual operating factors such as poor road conditions. Many of these operators may be in a

position to purchase a device such as the anti-skid control simply because the key man is convinced of its value.

3. There are a number of important requirements which would have to be met to successfully sell the Perma control in the user aftermarket.

a) Promotion to the user is the most important market requirement. The anti-skid control, in spite of the considerable amount of notice received in trade press, is virtually unknown to the car-owning public, and its story must be explained. In addition, the control is an item that a car owner does not have to have, and it therefore must be promoted more intensely than service or replacement parts which are necessary to operate his car. Promotional techniques which might be used include television "spot" announcements, group demonstrations, movie shorts, newspaper and magazine advertising and personal calls.

b) Demonstrated reliability recognized by the motoring public would be essential to marketing of this product, both because it is new and because it becomes a part of the braking system of the car. Reliability could be demonstrated in a number of ways, including association of the control with established and universally respected names such as Singer. In addition, the record of fleets or other groups that have had good field experience with the device would be helpful.

c) Installation service for the unit must be competent. Although the unit does not require much time to install, the person doing the job must be skilled. Because the unit goes into the braking system, all installation work must be sound.

d) Credit would be needed for this item because the relatively high cost of the Perma control cannot be met by the typical aftermarket purchaser in a cash payment.

D. Distribution to the User Aftermarket

Three established distribution systems represent possible channels for sales of the Perma anti-skid control, and meet to varying

degrees the requirements for serving the user aftermarket. A fourth means of distribution -- direct-to-user sales -- would represent a fourth possibility. Effective use of any of these distribution systems would require strong promotional support.

1. New-car dealers presently sell independently manufactured accessory items as part of the new-car sale or when the new car is serviced. The dealer operates in a highly competitive environment in his sales of new cars. For instance, the average Ford dealer makes only $27 on each new-car sale, with General Motors dealers only slightly better. Accessories, on the other hand, have a much higher margin and present the dealer and his salesmen with a better profit opportunity than the car itself. New-car dealers would be interested in handling the anti-skid control as a relatively high-profit accessory item, and Perma's New York distributor appears to have had some limited initial success in placing the item with dealers.

2. The gas station, particularly selling through the TBA (tires, batteries and accessories) divisions of national oil companies, would present a means of distribution. The typical gas station is faced with a highly competitive situation in sales of gasoline and the TBA program is an effort to broaden the station's sales into higher-margin items. This channel is of particular interest because of the favorable reaction to the unit developed with Phillips Petroleum, which has been most interested in promoting the item. The gas station is able to offer credit through their credit cards. Although many stations would have the necessary installation competence, small stations do not have the skill to install the unit. In addition, the gas station is not a promotional outlet and would have to be backed with an independent promotional program.

3. The independent automotive specialty chains could possibly present a good outlet for the Perma control. These selling and installing organizations include U.S. Royal, Firestone, B.F. Goodrich, Vanderbilt, Midas Muffler and others. These outlets base their business on strong promotion and advertising and could handle the anti-skid control. The issue with this

[R 132]

type of distribution is that they are very selective as to products handled. Their objective is to handle products which will make most efficient use of salesmen's time, and hence prefer established products for which user acceptance is well established and which can be sold with the minimum of sales time and effort. Also, in line with the nature of these operations, there is a requirement for rapid turnover of stock; one major chain sets a minimum of four times a year. This limits the number of different products these stores will carry.

4. Direct user sales has been shown to be a possible method of selling anti-skid control. Several of the Perma distributors have had limited experience in selling through a number of direct-sale operators. Techniques have included demonstrations, following leads from advertising or from promotional talks, and neighborhood gatherings. This type of selling gives an opportunity for very heavy promotional effort. Arrangements would have to be made independently by the salesman for installation and credit. Large businesses in other products have been developed on this distribution basis and it can be a highly effective method of selling certain specialized products.

E. Short-Term Market Prospects

Based upon the results of this preliminary survey, it appears unlikely that the stated sales objective for the Perma control will be attained. With the prospect for sales to the automotive manufacturers virtually nil in the foreseeable future, and limited prospects in the fleet market, significant sales volume during the next two years will have to be realized from the user aftermarket. An aggressive, promotionally-oriented marketing program could probably develop sales of approximately 100 thousand units within the next two-year period. Estimates of sales

to the principal markets are summarized in Exhibit 2.

1. Based on evaluation by major automotive manufacturers, the Perma anti-skid control does not meet established requirements, and cannot be expected to find a place in the OEM market under present conditions. In the longer-range future, however, it is possible that anti-skid controls of some type may be included in the braking system of automobiles as original equipment.

2. Despite the large number of vehicles operated in civilian and government fleets, the sales potential for the Perma control appears quite limited. It is estimated that approximately 500 units could be sold the first year, and from 2,000 to 4,000 the second year. It is expected that these sales would be to small civilian fleets. The strict cost considerations under which professionally run fleets operate cannot justify a high-priced item like the Perma control, and impose a severe limitation to sales prospects in this market.

3. Depending on the effectiveness and intensity of sales effort, it is possible that on the order of 25,000 units could be sold in the user aftermarket during the first year, and perhaps two-to-three times this volume the second year, or from 50,000 to 75,000 units. It is most likely that these sales will be through car dealers and direct-sales organizations. TBA and specialty automotive products companies contacted as part of this survey expressed strong reluctance to taking on the Perma control -- mainly because their operations are not geared to promotion and introduction of new products.

4. Although it is beyond the scope of this preliminary survey to evaluate in depth the various distribution methods open to the Perma control, or to recommend a marketing program, it is apparent that the anti-skid control has certain characteristics which could support a major direct-selling operation.

   a) Involving, as it does, family safety, the anti-skid control is subject to promotion on a strong emotional basis. Coupled with this is the fact that it is a product which is demonstrable in familiar and understandable terms to the large car-owning population. Selling at a price well over

$100, there is a good margin for significant sales commissions.

b) In recent years a number of consumer products having some of the above characteristics have been very successfully sold on a door-to-door basis and sales volumes so developed have been impressive at the peak of such programs. Sales volume is limited virtually only by the number of salesmen employed. Products such as water softeners, home fire and burglar alarms, storm windows, siding, and vacuum cleaners are examples of products sold by this type of sales operation.

c) Many of these selling organizations have engaged in the doubtful practices to which direct sales activities are subject, and have experienced serious financial and legal programs. In this regard estimates of possible sales of the Perma control have assumed good control of sales and promotional activities and careful selection of sales representatives. Marketing by means of the typical door-to-door operators on an unrestricted basis would represent a very different set of conditions and could present much greater sales prospects.

Exhibit 1

RESULTS OF ENGINEERING TESTS OF THE PERMA ANTI-SKID CONTROL

Agency Sponsoring Testing	Location	Approximate Results of Stopping Distance Tests		Stability of Car During Locked-Wheel Stop	Reliability of Unit	Overall Estima of the Worth of the Unit
		Dry Pavement	Wet & Slippery			
Perma Research & Development	Motor Vehicle Research (Maine & New Hampshire)	15% less stopping distance with Perma	5% to 20% less distance with Perma	Considerable increase in stability	Laboratory tests of certain parts of the unit show reliability	Very valuable
Cadillac Motor Car Co. (div. of General Motors Corp.)	Delco Moraine Div. of G.M. (Dayton, Ohio	5% to 10% more distance required with Perma	Slightly less stopping distance with Perma	Increased stability	Not tested	Has some valu in control of c even though longer stopping distance
General Motors Technical Center	G.M. Proving Ground (Detroit)	9% to 18% more distance required	4% to 27% more distance required	Increased stability	Not tested	Gain in stabil does not justi longer stoppi distance
Chrysler	Chrysler Test Facilities (Detroit)	5% to 15% more required	5% to 15% more required	Increased stability	Not tested	Gain in stabil does not justi longer stoppi distance
Ford	Ford Test Facilities (Detroit	1% to 10% more required	5% to 10% more required	No significant increased stability	Not tested	Not of value

Exhibit 1 (Cont.)

RESULTS OF ENGINEERING TESTS OF THE PERMA ANTI-SKID CONTROL

Agency Sponsoring Testing	Location	Approximate Results of Stopping Distance Tests		Stability of Car During Locked-Wheel Stop	Reliability of Unit	Overall Estimate of the Worth of the Unit
		Dry Pavement	Wet & Slippery			
American Motors	No formal tests made Unit on test car in car pool	-	-	Increased stability recognized	Not tested	Has some value in control of car even though longer stopping distance
Phillips Petroleum	Phillips Test Track (Bartlesville, Oklahoma)	-	5% to 20% more required	Increased stability	Not tested	Unit has value in control of car; would also like to see shorter stopping distance

B-19

IR, 132

Exhibit 2

Perma Anti-Skid Control

PRELIMINARY ESTIMATE OF MARKET POTENTIAL

SUMMARY BY PRINCIPAL MARKETS

Market	Key Factor in Selling Market	Rate of Penetration	Potential Unit Volume 1st Year	Potential Unit Volume 2nd Year
Original Equipment Manufacturers	(1) Engineering acceptance	None expected	-	-
	(2) Cost versus value on market	None expected	-	-
Fleet:				
Civilian	Reduction in operating costs	Slow	500	3,000
Government	Low initial cost of article and equipment	Very slow	150	1,000
User After-Market	Strength of promotional effort	Potentially rapid, depending on promotional program	25,000	70,000

A-235

JUDGMENT AFTER TRIAL, DATED MAY 29, 1975 AND ENTERED ON JUNE 3, 1975 (R 136)

[R 136, p 1]

UNITED STATES DISTRICT COURT
SOUTHERN DISTRICT OF NEW YORK

- x

:

SAME CAPTION :

:

:

- x

This cause having come on for trial before the Court and a jury, Hon. Kevin Thomas Duffy, United States District Judge, presiding, commencing on the 5th day of November, 1973, and the parties having thereafter waived the jury and continued the trial before the Court, which trial concluded on the 28th day of June, 1974 and the issues having been duly tried and the Court having rendered its decision in an opinion dated April 11, 1975 which contains the Court's findings of fact and conclusions of law and plaintiff, Perma Research & Development Company having moved this Court for an order conforming the arithmetic calculations set forth at pages 57 and 58 of said opinion to the findings of fact set forth at pages 55 and 56 thereof, and the Court having given due consideration to the papers submitted by the parties with respect thereto,

[R 136]

NOW, THEREFORE, it is

[R 136, p 2]

ORDERED, ADJUDGED AND DECREED that the aforesaid motion of plaintiff is hereby denied and

IT IS FURTHER ORDERED, ADJUDGED AND DECREED that plaintiff, Perma Research & Development Company recover from defendant, The Singer Company, the principal sum of $5,333,423.94, together with interest thereon at the rate provided in CPLR §5004 through May 15, 1975 in the amount of $1,521,165.82, and after May 15, 1975 to the date of entry of judgment at the daily rate of $888.90, together with the entire costs of this action, and

IT IS FURTHER ORDERED, ADJUDGED AND DECREED that defendant's counterclaim be and the same hereby is dismissed on the merits.

Dated: New York, New York
May 29, 1975

E N T E R

/s/ Kevin Thomas Duffy
U.S.D.J.

JUDGMENT ENTERED:

Dated: New York, New York
June 3, 1975

/s/ Raymond F. Burghardt
Clerk

[R 136]

NOTICE OF APPEAL FILED JUNE 13, 1975 (R 141)

[R 141, p 1]

UNITED STATES DISTRICT COURT

SOUTHERN DISTRICT OF NEW YORK

- x

:

:

SAME CAPTION :

:

:

- x

Notice is hereby given that The Singer Company, defendant above named, hereby appeals to the United States Court of Appeals for the Second Circuit from (1) the Judgment After Trial of United States District Judge Kevin T. Duffy, dated May 29, 1975 and entered on June 3, 1975, (2) that part of the Order and Judgment of United States District Judge Frederick V.P. Bryan, dated August 11, 1968 and entered August 13, 1968, which denies The Singer Company's motion for summary judgment on the Second Count of the Complaint insofar as said Count seeks damages for the alleged breach of the December 21, 1964 agreement between Perma Research & Development Company and The Singer Company, (3) the decision and Order of United States District Judge Lloyd F. MacMahon, dated and filed on January 27, 1970, (4) the decision and Order of United

[R 141]

States District Judge Charles M. Metzner, dated May 14, 1970 and filed May 15, 1970, and (5) the Supplementary Pre-trial Order of United States District Judge Kevin T. Duffy, dated and filed on September 28, 1973.

Dated: New York, New York
June 13, 1975

WINTHROP, STIMSON, PUTNAM & ROBERTS

By /s/ Merrell E. Clark, Jr.
A Member of the Firm

Attorneys for Defendant
Office and P.O. Address
40 Wall Street
New York, New York 10005
Tel. (212) 943-0700

[R 141, p 2]

TO: Poletti Freidin Prashker
Feldman & Gartner
Attorneys for Plaintiff
777 Third Avenue
New York, New York 10017

Clerk
United States Court of Appeals
For the Second Circuit
United States Courthouse
Foley Square
New York, New York 10007

AMENDED JUDGMENT AFTER TRIAL, DATED JUNE 13, 1975 AND ENTERED JUNE 16, 1975 (R 142)

[R 142, p 1]

UNITED STATES DISTRICT COURT
SOUTHERN DISTRICT OF NEW YORK

- x

:

SAME CAPTION :

:

:

- x

This cause having come on for trial before the Court and a jury, Hon. Kevin Thomas Duffy, United States District Judge, presiding, commencing on the 5th day of November, 1973, and the parties having thereafter waived the jury and continued the trial before the Court, which trial concluded on the 28th day of June, 1974 and the issues having been duly tried and the Court having rendered its decision in an opinion dated April 11, 1975 which contains the Court's findings of fact and conclusions of law and plaintiff, Perma Research & Development Company having moved this Court for an order conforming the arithmetic calculations set forth at pages 57 and 58 of said opinion to the findings of fact set forth at pages 55 and 56 thereof, and the Court having given due consideration to the papers submitted by the parties with respect thereto,

NOW, THEREFORE, it is

[R 142, p 2]

ORDERED, ADJUDGED AND DECREED that the aforesaid motion of plaintiff is hereby denied and

IT IS FURTHER ORDERED, ADJUDGED AND DECREED that plaintiff, Perma Research & Development Company recover from defendant, The Singer Company, the principal sum of $5,333,423.94, together with interest thereon, as provided in CPLR §§5001 through 5004, through May 15, 1975 in the amount of $1,529,614.34, and after May 15, 1975 to the date of entry of judgment at the daily rate of $1,137.39 together with the entire costs of this action, and

IT IS FURTHER ORDERED, ADJUDGED AND DECREED that defendant's counterclaim be and the same hereby is dismissed on the merits.

Dated: New York, New York
Friday, June 13, 1975

E N T E R

/s/ Kevin Thomas Duffy
U.S.D.J.

JUDGMENT ENTERED:

Dated: New York, New York
June 16, 1975

/s/ Raymond F. Burghardt
Clerk

6/17/75 - Bill of Costs as taxed in the sum of $20,728 in favor of plaintiff, and added to the Judgment.

/s/ Raymond F. Burghardt
Clerk

[R 142]

AMENDED NOTICE OF APPEAL, FILED JUNE 23, 1975 (R 145)

[R 145, p 1]

UNITED STATES DISTRICT COURT

SOUTHERN DISTRICT OF NEW YORK

- x

:

SAME CAPTION :

:

:

- x

Notice is hereby given that The Singer Company, defendant above named, hereby appeals to the United States Court of Appeals for the Second Circuit from (1) the Judgment After Trial of United States District Judge Kevin T. Duffy, dated May 29, 1975 and entered on June 3, 1975, as amended by the Amended Judgment After Trial, dated June 13, 1975 and entered on June 16, 1975, (2) that part of the Order and Judgment of United States District Judge Frederick V.P. Bryan, dated August 11, 1968 and entered August 13, 1968, which denies The Singer Company's motion for summary judgment on the Second Count of the Complaint insofar as said Count seeks damages for the alleged breach of the December 21, 1964 agreement between Perma Research & Development Company and The Singer Company, (3) the decision and Order of United States District Judge Lloyd F. MacMahon, dated and filed on January 27, 1970, (4) the decision and Order of United States District

[R 145]

Judge Charles M. Metzner, dated May 14, 1970 and filed May 15, 1970, and (5) the Supplementary Pre-trial Order of United States District Judge Kevin T. Duffy, dated and filed on September 28, 1973.

Dated: New York, New York
June 23, 1975

WINTHROP, STIMSON, PUTNAM & ROBERTS

By /s/ Merrell E. Clark, Jr.
A Member of the Firm

Attorneys for Defendant
Office and P.O. Address
40 Wall Street
New York, New York 10005
Tel. (212) 943-0700

[R 145, p 2]

TO:

Clerk
United States Court of Appeals
Second Circuit
United States Courthouse
Foley Square
New York, New York 10017

Poletti Freidin Prashker Feldman
& Gartner
Attorneys for Plaintiff
777 Third Avenue
New York, New York 10017

NOTICE OF CROSS-APPEAL, FILED JULY 3, 1975 (R 149)

[R 149, p 1]

UNITED STATES DISTRICT COURT

SOUTHERN DISTRICT OF NEW YORK

- x

:

:

SAME CAPTION

:

:

- x

Notice is hereby given that Perma Research & Development Company, plaintiff above named, hereby appeals to the United States Court of Appeals for the Second Circuit from so much of the Amended Judgment After Trial of United States District Judge Kevin T. Duffy, dated June 13, 1975 and entered on June 16, 1975 as denies plaintiff's motion for an order conforming the arithmetic calculations set forth at pages 57 and 58 of the Court's opinion, containing findings of fact and conclusions of law, to the findings of fact set forth at pages 55 and 56 of the opinion.

Dated: New York, New York
July 2, 1975

POLETTI FREIDIN PRASHKER
FELDMAN & GARTNER
Attorneys for Plaintiff
Office & P.O. Address
777 Third Avenue
New York, New York 10017
212-688-3200

By /s/ Paul R. Grand
A Member of the Firm

[R 149, p 2]

TO: WINTHROP, STIMSON, PUTNAM & ROBERTS
Attorneys for Defendant
40 Wall Street
New York, New York 10005

Clerk
United States Court of Appeals
For the Second Circuit
United States Courthouse
Foley Square
New York, New York 10007